Appendix A

Enforcement Order

STATE OF COLORADO

Bill Ritter, Jr., Governor
James B. Martin, Executive Director

Dedicated to protecting and improving the health and environment of the people of Colorado

4300 Cherry Creek Dr. S.
Denver, Colorado 80246-1530
Phone (303) 692-2000
TDD Line (303) 691-7700
Located in Glendale, Colorado

http://www.cdphe.state.co.us

Laboratory Services Division
8100 Lowry Blvd.
Denver, Colorado 80230-6928
(303) 692-3090

Colorado Department
of Public Health
and Environment

September 2, 2008

Certified Mail Number: 7007 0220 0001 0156 8908

PWSID# CO-0138045
City of Sterling
421 N 4th St
PO BOX 4000
STERLING, CO-80751

RE: Service of Drinking Water Enforcement Order, Number: DC-080902-1

Dear Sir or Madam:

The City of Sterling is hereby issued the enclosed Enforcement Order (the "Order"). This Order is issued by the Colorado Department of Public Health and Environment, Water Quality Control Division (the "Department") pursuant to the authority given to the Department by §25-1.5-203 of the Colorado Revised Statutes ("C.R.S."). The Department bases this Order upon findings that the City of Sterling violated the *Colorado Primary Drinking Water Regulations* (the "Regulations") as described in the enclosed Order.

As a recipient of an enforcement order the City of Sterling may request a formal hearing to contest the Order in accordance with the Regulations, 5 CCR 1003-1, §1.6.7(g). Requests for such a hearing must be filed in writing with the Department within thirty (30) calendar days after service of the Order. Hearings on enforcement orders shall be held in accordance with applicable provisions of the State Administrative Procedure Act, §§24-4-101 through 24-4-108, C.R.S.

This action could result in the imposition of administrative or civil penalties. The Department or a State District Court is authorized pursuant to §25-1-114.1, C.R.S. to impose a penalty of up to $1,000 per violation per day. Please be advised that the Department is continuing its investigation into this matter and the Department may identify supplementary violations that warrant amendments to this Order or the issuance of additional enforcement actions.

Should the City of Sterling desire to informally discuss this matter with the Department or if the City of Sterling has any questions regarding the Order, please don't hesitate to contact Cathy Heald at (303) 692-3254 or by electronic mail at catherine.heald@state.co.us.

Sincerely,

Kristi-Raye Beaudin

Kristi-Raye Beaudin, Legal Assistant
Compliance Assurance and Data Management Section
WATER QUALITY CONTROL DIVISION

Enclosure

cc: Northeast Colorado Health Department
Compliance Monitor / Drinking Water File

ec: Dennis Pontius, Engineering Section, CDPHE
Dick Parachini, Watershed Program, CDPHE
Betsy Beaver, Facility Operators Program, CDPHE
Shawn McCaffrey, EPA Region VIII
Patricia Klocker, Assistant Division Director, Consumer Protection Division, CDPHE
Carolyn Schachterle, OPA
William Wright (wright@sterlingcolo.com), System Operator

COLORADO DEPARTMENT OF PUBLIC HEALTH AND ENVIRONMENT

WATER QUALITY CONTROL DIVISION

ENFORCEMENT ORDER **NUMBER: DC-080902-1**

IN THE MATTER OF: CITY OF STERLING
PUBLIC WATER SYSTEM IDENTIFICATION NUMBER: CO-0138045
LOGAN COUNTY, COLORADO

Pursuant to the authority vested in the Colorado Department of Public Health and Environment (the "Department") by §25-1-109 and §25-1.5-203 of the Colorado Revised Statutes ("C.R.S."), which authority has been delegated to the Department's Water Quality Control Division (the "Division"), the Division hereby makes the following findings and issues the following Enforcement Order:

GENERAL FINDINGS

1. The City of Sterling ("Sterling") owns and/or operates a drinking water system located in the vicinity of 421 North 4th Street, in the City of Sterling, Logan County, Colorado (the "System").

2. Sterling is a person as defined by 5 CCR 1003-1, §1.5.2(92).

3. Sterling is a supplier of water within the meaning of §25-1.5-201(2), C.R.S. and its implementing regulation, 5 CCR 1003-1, §1.5.2(122).

4. The System is a public water system as defined by §25-1.5-201(1), C.R.S. and its implementing regulation, 5 CCR 1003-1, §1.5.2(101).

5. The Public Water System Identification Number ("PWSID"), assigned to the System by the Division is PWSID # CO0138045.

6. Pursuant to 5 CCR 1003-1, §1.2, the System is subject to the *Colorado Primary Drinking Water Regulations* (the "Regulations"), which were adopted pursuant to §25-1.5-203, C.R.S.

7. The Sterling provides piped water for human consumption from the System to at least fifteen (15) service connections used by year-round residents of the area served by the System and/or regularly serves at least twenty-five (25) year-round residents. The System is therefore classified as a "community water system" as defined by 5 CCR 1003-1, §1.5.2(13).

8. The System's source of water is groundwater as defined by 5 CCR 1003-1, §1.5.2(60).

First Violation
(Exceeding the Maximum Contaminant Level for Uranium)

9. Pursuant to 5 CCR 1003-1, §2.6 and §6.3 the radionuclide monitoring, compliance requirements and maximum contaminant levels for radionuclides apply to all community public water systems.

10. Pursuant to 5 CCR 1003-1, §2.6, Table 2-7(4), the maximum contaminant level for uranium is 30 micrograms per liter (µg/L).

11. Pursuant to 5 CCR 1003-1, §6.3.5(a)(1), for systems monitoring more than once per year, compliance with the maximum contaminant level is determined by a running annual average at each sampling point. If the average of any sampling point is greater than the maximum contaminant level, then the system is out of compliance with the maximum contaminant level.

12. A review of the radiological monitoring data from calendar year 2004 to present provided to the Department by the System, establishes that the running annual average of samples obtained by the System at quarterly intervals exceeds the maximum contaminant level for uranium as shown below:

	Uranium {in micrograms per liter (µg/L)}				
Sample Point	**Result Sample and Date**	**Result Sample and Date**	**Result Sample and Date**	**Result Sample and Date**	**Running Annual Average**
003 (TANK NO 1 - 7.5 MG WEST SITE 6)	41 µg/L 01/12/04	46 µg/L 04/20/04	System Failed to Sample	Seasonal-Did not operate Q4	44 µg/L
	Seasonal - Did not operate Q1	43 µg/L 06/27/07	43 µg/L 07/10/07	45 µg/L 11/14/07	44 µg/L
	43 µg/L 06/27/07	43 µg/L 07/10/07	45 µg/L 11/14/07	Seasonal - Did not operate Q1	44 µg/L
	43 µg/L 07/10/07	45 µg/L 11/14/07	Seasonal - Did not operate Q1	41 µg/L 05/28/07	43 µg/L
022 (PIPELINE WELLS 15 & 30 SITE 3)	41 µg/L 01/12/04	46 µg/L 04/20/04	System Failed to Sample	System Failed to Sample	44 µg/L
	45 µg/L 03/07/07	50 µg/L 05/23/07	46 µg/L 07/10/08 and 39 µg/L 08/15/07	37 µg/L 11/14/07	45 µg/L
	50 µg/L 05/23/07	46 µg/L 07/10/08 and 39 µg/L 08/15/07	37 µg/L 11/14/07	47 µg/L 02/27/08	44 µg/L
	46 µg/L 07/10/08 39 µg/L 08/15/07	37 µg/L 11/14/07	47 µg/L 02/27/08	49 µg/L 04/07/08	44 µg/L

13. Pursuant to 5 CCR 1003-1, §6.3.5(a)(4), if the system does not collect all required samples when compliance is based on a running annual average of quarterly samples, compliance will be based on the running average of the samples collected.

14. Sterling's failure to comply with the maximum contaminant level for uranium constitutes violation(s) of 5 CCR 1003-1, §2.6, Table 2-7(4).

Second Violation
(Failure to Comply with the Maximum Contaminant Levels for Total Trihalomethanes)

15. Pursuant to 5 CCR 1003-1, §2.4, Table 2-5(1), the maximum contaminant level of 0.080 mg/L for total trihalomethanes ("TTHM") are applicable to all community water systems.

16. Pursuant to 5 CCR 1003-1, §7.5.3(b)(1), the System must monitor for TTHM at the following frequency and locations:

Type of System	Minimum Monitoring Frequency	Sample Location in the Distribution System
System using only groundwater not under direct influence of surface water using chemical disinfectant and serving 10,000 or more persons.	One water sample per quarter per treatment plant.	Locations representing maximum residence time.

17. Pursuant to 5 CCR 1003-1, §7.5.4(b)(1)(i) compliance with the maximum contaminant levels for TTHM must be based on a running annual arithmetic average ("RAA"), computed quarterly, of quarterly arithmetic averages of all samples collected by the system as prescribed by 5 CCR 1003-1, §7.5.3(b)(1).

18. Pursuant to 5 CCR 1003-1, §7.5.5(a), Systems required to sample quarterly or more frequently must report to the Department within ten (10) days after the end of each quarter in which samples were collected, notwithstanding the provisions of Article 1, §1.6.4. Systems required to sample less than quarterly must report to the Department within ten (10) days after the end of each monitoring period in which samples were collected.

19. From calendar year 2006 (4th Quarter) to present, monitoring data submitted to the Division from the System establishes the following TTHM running annual arithmetic averages for the System in exceedance of the TTHM maximum contaminant level:

TTHM {in milligrams per liter (mg/L)}				
4th Q 2006 0.095 mg/L	1st Q 2007 0.076 mg/L	2nd Q 2007 0.058 mg/L	3rd Q 2007 0.133 mg/L	RAA= 0.091 mg/L
1st Q 2007 0.076 mg/L	2nd Q 2007 0.058 mg/L	3rd Q 2007 0.133 mg/L	4th Q 2007 0.063 mg/L	RAA= 0.083 mg/L

20. Pursuant to 5 CCR 1003-1, §7.5.4(b)(1)(iii), if the running annual arithmetic average of quarterly averages covering any consecutive four-quarter period exceeds the maximum contaminant level, the system is in violation of the maximum contaminant level and must notify the public pursuant to 5 CCR 1003-1, Article 9, §9.2, in addition to reporting to the Department pursuant to 5 CCR 1003-1, §7.5.5.

21. Sterling's failure to comply with the maximum contaminant level for total trihalomethanes, as indentified in paragraph 19 above, constitutes violations of 5 CCR 1003-1, §2.4, Table 2-5(1).

COMPLIANCE ORDER

Based upon the foregoing factual and legal determinations and pursuant to 5 CCR 1003-1, §1.6.7, Sterling is hereby ordered to:

22. Immediately comply with the *Colorado Primary Drinking Water Regulations*, 5 CCR 1003-1, Articles 1 through 12.

Further, the Division hereby orders Sterling to comply with the following specific terms and conditions of this Order.

23. In order to ensure long-term compliance with the maximum contaminant levels for uranium and total trihalomethanes, Sterling shall evaluate and upgrade, as needed, the System's water sources and/or treatment process(es) in accordance with the following schedule:

    a. By September 30, 2008, retain a qualified Professional Engineer (licensed in Colorado and experienced in drinking water systems) to evaluate and recommend radiological and disinfection by-product treatment technologies or alternate water sources to Sterling to ensure compliance with the maximum contaminant levels for uranium and total trihalomethanes. The Department is in the process of evaluating its criteria to determine the direct influence of surface water on ground water sources. The Department has expressed concern to Sterling that some of its groundwater sources may be under the direct influence of surface water. Therefore, the treatment technology recommendations must also contain an evaluation of treatment processes to address any groundwater sources which may be subsequently determined to be under the direct influence of surface water.

    b. By July 1, 2009, submit for Department review and comment a finalized Preliminary Engineering Report for system improvements to comply with the maximum contaminant level for uranium and total trihalomethanes. This report must also contain an evaluation of treatment processes to address any groundwater sources which may be subsequently determined to be under the direct influence of surface water.

        i. The Preliminary Engineering Report submittal package must be developed consistent with the *Colorado Drinking Water Preliminary Engineering Report Guidance & Review Checklist Form.* (see http://www.cdphe.state.co.us/wq/opa/pdf/19_CPERGuideChecklistDW.pdf)

        ii. If an alternate water source is proposed, submit for Department review and comment detailed engineering plans and specifications for the source including a description of the alternate water source along with a copy of the laboratory analyses supporting that the alternate water source is suitable.

iii. The Preliminary Engineering Report must clearly identify the specific treatment technology Sterling will use to ensure compliance with the maximum contaminant levels for uranium and total trihalomethanes.

iv. The Preliminary Engineering Report must include a process flow schematic of the distribution system from wellheads to points of use, including flow rates, treatment facilities, storage tanks and all service connections supplied by the wells. Alternative treatment locations for the selected treatment process or processes must be evaluated with a recommended location selection. The process flow schematic information and evaluation must be included to ensure all water from the System is treated.

v. The Preliminary Engineering Report must include a proposal for management of residuals from the treatment technology selected.

vi. The Preliminary Engineering Report submittal package must include design calculations showing the proposed treatment system is properly sized and chlorine contact times can be met for expected flow rates.

{Please note that, prior to construction, the Department must give final approval to any modifications to the System's water source or treatment process. The Department will not perform a detailed review and final approval of any proposed modifications until the final design plans and specifications have been received pursuant to paragraph 23(d) below.}

c. By November 1, 2009, submit for Department review and comment the final Design Report for the Sterling System improvements to comply with the maximum contaminant levels for uranium and total trihalomethanes. This report must also contain an evaluation of treatment processes to address any groundwater sources which may be subsequently determined to be under the direct influence of surface water.

d. By May 1, 2010, submit Final Design Plans and Specifications for the System improvements for Department review and approval in accordance with the *State of Colorado Design Criteria for Potable Water Systems.*

e. By December 31, 2011, complete construction/implementation of the Department approved System improvements to ensure long-term compliance with the maximum contaminant levels for uranium and total trihalomethanes.

f. By February 15, 2012, submit the Professional Engineer's Certification that the System improvements to comply with the maximum contaminant levels for uranium and total trihalomethanes were constructed/installed as approved by the Department.

24. Within thirty (30) calendar days after receipt of this Enforcement Order, Sterling shall perform uranium monitoring of each well water source used or available to the System. Beginning October 1, 2008, Sterling is authorized to cease performing quarterly entry point uranium compliance monitoring at entry points 003 and 022. In the alternative, Sterling shall perform annual uranium compliance monitoring consisting of collection of a single sample from entry points 003 and 022 one time per calendar year beginning January 1, 2009. The uranium sample(s) must be properly collected and analyzed by a Department certified laboratory in accordance with approved methods. Sterling shall provide the Department with the results of the uranium analyses within ten (10) calendar days of the end of each

monitoring period. All other System monitoring shall be performed in accordance with the Regulations and the Department provided monitoring schedules.

25. Within forty-five (45) calendar days after receipt of this Enforcement Order, Sterling shall complete an evaluation to determine appropriate interim measures to ensure that the System is providing the best possible quality of water available until the System implements improvements to ensure long-term compliance with the maximum contaminant level for uranium. At a minimum, the evaluation shall consider the following:

    a. The uranium concentrations for the existing individual wells, associated well flow rates, and blending opportunities.

    b. Water conservation efforts designed to minimize the use of the most offending wells.

    Within sixty (60) calendar days after receipt of this Enforcement Order, Sterling shall submit a written report of the results of this evaluation, along with a well operations plan, to the Division for review and comment. Implementation of the interim measures identified by Sterling shall become a condition of this Enforcement Order unless notified by the Division, in writing, that alternate or additional interim measures are appropriate. If the Division imposes alternate or additional interim measures, they shall also become a condition of this Enforcement Order.

26. Within ninety (90) calendar days after receipt of this Enforcement Order, Sterling shall complete an evaluation to determine appropriate interim measures to ensure that the System is providing the best possible quality of water available until the System implements improvements to ensure long-term compliance with the maximum contaminant level for total trihalomethanes. At a minimum, the evaluation shall include the detailed analysis of storage tank operations with specific consideration of water turnover rate, well control and operations to maintain water level set points as they relate to System demands. Within seventy-five (75) calendar days after receipt of this Enforcement Order, Sterling shall submit a written report of the results of this evaluation to the Division for review and comment. Implementation of the interim measures identified by Sterling shall become a condition of this Enforcement Order unless notified by the Division, in writing, that alternate or additional interim measures are appropriate. If the Division imposes alternate or additional interim measures, they shall also become a condition of this Enforcement Order.

27. Within one hundred and eighty (180) calendar days after receipt of this Enforcement Order, Sterling shall develop and submit for Department review and comment a proposed outreach and communication strategy that outlines the activities Sterling will undertake to inform its residents of the health effects associated with the uranium and total trihalomethanes maximum contaminant levels and to build community support to obtain System improvement approval and funding to achieve compliance with the uranium and total trihalomethanes maximum contaminant levels. Implementation of the outreach and communication strategy developed by Sterling shall become a condition of this Enforcement Order unless notified by the Division, in writing, that alternate or additional activities are appropriate. If the Division imposes alternate or additional interim measures, they shall also become a condition of this Enforcement Order.

28. Within thirty (30) calendar days after receipt of this Enforcement Order and every calendar quarter thereafter, Sterling shall issue a public notice in accordance with 5 CCR 1003-1, Article 9.2 for each ongoing uranium and total trihalomethanes maximum contaminant level violation until Sterling has

effectively addressed and returned to compliance with the uranium and total trihalomethanes maximum contaminant levels outlined in 5 CCR 1003-1, §§ 2.4 and 2.6. Within ten (10) calendar days of completion of each required public notification, Sterling shall submit to the Department, along with the mandatory Public Notification Certification of Delivery, a representative copy of notices distributed, published, posted, and/or made available to the persons served by the system and/or to the media. *(Attached are copies of procedures and forms to assist you with the public notification requirements.)*

29. Sterling shall submit "System Improvement Project - Progress Reports" to the Division every ninety (90) calendar days. The first report shall be submitted to the Division by October 1, 2008. At a minimum, each report shall clearly indicate the status of the system improvement project at the time the report is filed and outline activities to be undertaken within the next ninety (90) calendar days. Each report shall also detail any public notification provided during that period. These reports shall be required until the System has effectively addressed and returned to compliance with the uranium and total trihalomethanes maximum contaminant levels outlined in 5 CCR 1003-1, §§ 2.4 and 2.6.

NOTICES AND SUBMITTALS

For all documents, plans, records, reports and replies required to be submitted by this order, Sterling shall submit an original and one copy (electronic is preferred) to the Division at the following address:

Colorado Department of Public Health and Environment
Water Quality Control Division / WQCD-WQP-B2
Compliance Assurance and Data Management Section / Enforcement Team
Attention: Catherine Heald
4300 Cherry Creek Drive South
Denver, Colorado 80246-1530
Email: catherine.heald@state.co.us

(For any facsimile transmittals, please include a cover sheet addressed to Ms. Heald.)

Pursuant to 5 CCR 1003-1, §1.6.4(e), all reports, notices, summaries, and certifications required to be submitted to the Department by the public water system must bear the original signature of the owner or the owner's authorized representative.

NOTICE OF COMPLETION

Sterling shall submit a Notice of Completion to the Division upon satisfactory completion of all requirements of this Enforcement Order. The Division shall either accept or reject the Notice of Completion in writing. If the Division rejects the Notice of Completion, it shall include in its notice a statement identifying the requirements that the Division considers incomplete or not satisfactorily performed and a schedule for completion. If Sterling wishes to dispute the Division's rejection of its Notice of Completion, it shall, within fifteen (15) calendar days of receipt of the Division's rejection, submit a written statement as to its belief of

full compliance, addressing in detail all concerns the Division raised in the rejection letter to the System's Notice of Completion.

PRIOR APPROVAL REQUIRED

Pursuant to 5 CCR 1003-1, §1.11.2, no person shall commence construction of any new waterworks, or make improvements to or modify the treatment process of an existing waterworks, or initiate use of a new source, until plans and specifications for such construction, improvements, modifications or use have been submitted to, and approved by the Department. A Professional Engineer registered in the State of Colorado shall design all treatment systems serving a community water supply. The Department shall grant such approval when it finds that the proposed facilities are capable of complying, on a continuous basis, with all applicable laws, standards, rules and regulations.

POTENTIAL ADMINISTRATIVE/CIVIL AND CRIMINAL PENALTIES

You are also advised, pursuant to §25-1-114.1, C.R.S., that violators of the Regulations or final Enforcement Orders issued by the Department are subject to civil or administrative penalties of up to one thousand dollars ($1,000) per violation per day, to be imposed by the Department or a State District Court. Further, pursuant to §25-1-114(4), C.R.S., any person, association, or corporation, or the officers thereof, who violates, disobeys, or disregards any provision of the Regulations or an Enforcement Order is guilty of a misdemeanor and, upon conviction thereof, shall be punished by a fine of not more than one thousand dollars ($1,000), or by imprisonment in the county jail for not more than one (1) year, or by both such fine and imprisonment and, in addition to such fine and imprisonment, shall be liable for any expense incurred by health authorities in removing any nuisance, source of filth, or cause of sickness. By virtue of issuing this Enforcement Order, the Department has not waived its right to bring an action for administrative, civil or criminal penalties and may bring such action in the future.

REQUEST FOR HEARING OR APPEAL

You are further advised, pursuant to 5 CCR 1003-1, §1.6.7(g), that a recipient of an Enforcement Order may request a hearing contesting such order. Requests for such a hearing shall be filed in writing with the Department within thirty (30) calendar days after service of the order. Such requests shall state the grounds upon which the order is contested and state the amount of time the recipient estimates will be required for the hearing. Hearings on Enforcement Orders shall be held in accordance with applicable provisions of the State Administrative Procedure Act, Article 4 of Title 24, C.R.S.

ADDITIONAL ACTION

You are further advised that under §25-1-114.1(1), C.R.S., the Department may institute a civil action against any person who violates a final Enforcement Order of the Department issued for violation of any minimum general sanitary standard or regulation adopted pursuant to §25-1.5-203, C.R.S.

Additionally, the Department may request the Attorney General to seek a temporary restraining order or permanent injunction to prevent or abate any violation of a minimum general sanitary standard or regulation adopted pursuant to §25-1.5-203, C.R.S. Further information concerning the aforementioned action is contained in §25-1-114.1(3), C.R.S.

Issued at Denver, Colorado, this 2nd day of September, 2008.

FOR THE COLORADO DEPARTMENT OF PUBLIC HEALTH AND ENVIRONMENT

Lori M. Gerzina

Lori M. Gerzina, Section Manager
Compliance Assurance and Data Management Section
Water Quality Control Division

Appendix B

Draft Environmental Assessment

Consultants in natural resources and the environment

Denver • Boise • Durango

DRAFT ENVIRONMENTAL ASSESSMENT
STERLING WATER TREATMENT PLANT
STERLING, COLORADO

Prepared for—

Richard P. Arber Associates
198 Union Boulevard, Suite 200
Lakewood, Colorado 80228

Prepared by—

ERO Resources Corporation
1842 Clarkson Street
Denver, Colorado 80218
(303) 830-1188

May 28, 2009

ERO Project #4417

ERO Resources Corp.
1842 Clarkson Street
Denver, CO 80218
(303) 830-1188
Fax: (303) 830-1199
www.eroresources.com
ero@eroresources.com

ERO Resources Corporation

CONTENTS

1.0 Purpose and Need of Project 1

2.0 Description of Proposed Action (Alternative 1a) 5

3.0 Alternatives to the Proposed Action 8
- 3.1 Alternative 2 – Coagulation Filtration with Granular Activated Carbon 8
- 3.2 Alternative 3 – Lime Softening 8
- 3.3 No Action Alternative 9
- 3.4 Comparison of Alternatives 9

4.0 Affected Environment/Environmental Consequences 10
- 4.1 Land Use/Important Farmland/Formally Classified Lands 10
- 4.2 Floodplains 12
- 4.3 Wetlands 13
- 4.4 Cultural Resources 19
- 4.5 Visual Aesthetics 25
- 4.6 Biological Resources 26
- 4.7 Surface Water and Ground Water Quality and Quantity 34
- 4.8 Socioeconomic/Environmental Justice Issues 36
- 4.9 Air Quality 36
- 4.10 Transportation 37
- 4.11 Noise 38

5.0 Summary of Mitigation 40

6.0 Public Participation 41

7.0 References 41

TABLES

Table 1. Planning level cost comparisons. 9

Table 2. Barriers provided by the three alternative treatment processes. 10

Table 3. Previous cultural surveys in the project APE. 21

Table 4. Previously recorded archaeological resources in the project APE: 23

Table 5. Federal or state threatened, endangered, and candidate species or state species of special concern potentially found in Logan County. 28

Table 6. Mitigation measures for affected resources. 40

Figure 1. Planning Area, WTP Site, and Pipeline Alignments 2

Figure 2. Population Projections 3

Figure 3. Water Demand Projections 4

Figure 4. NWI Wetlands in the Planning Area 15

Figure 5. Wetlands near the WTP Site and Pipeline Alignments 16

Figure 6. Cultural Resources near the WTP Site and Pipeline Alignments 22

Figure 7. White-tailed Deer Concentration Area 33

DRAFT ENVIRONMENTAL ASSESSMENT
STERLING WATER TREATMENT PLANT
STERLING, COLORADO

MAY 28, 2009

1.0 Purpose and Need of Project

The City of Sterling (the City or Sterling) is located within Logan County approximately 120 miles northeast of Denver along Interstate 76 adjacent to the South Platte River (Figure 1). The City's limits encompass 5.38 square miles. Primary water uses in the City include residential, commercial, industrial, and government water use, as well as irrigation. The City water system serves a residential population of approximately 13,900 and 4,626 service taps. The planning area for the Environmental Assessment (EA) is the current and future service area for the City's water treatment system (Figure 1).

The City was issued an Enforcement Order (DC-080902-1) by the Colorado Department of Public Health and Environment (CDPHE) on September 2, 2008 related to violations of two National Primary Drinking Water Standards, which are legally enforceable:

1) The City's well water supply has elevated concentrations of uranium that exceed the Maximum Contaminant Limit (MCL) of 30 µg/L.
2) Levels of the disinfection byproduct (DBP) total trihalomethanes (TTHM) in the City's water supply have occasionally approached, and exceeded, the MCL of 80 µg/L.

In addition to these violations of the National Primary Drinking Water Standards, the City has several other water quality concerns:

1. CDPHE is concerned that the wells should be considered Groundwater Under Direct Influence (GUDI) of surface water, which could require full filtration (the City currently provides disinfection only).
2. Several of the wells, in particular those located on west side of the City, have concentrations of nitrate that sometimes approach but do not exceed the National Primary Drinking Water Standard of 10 mg/L.
3. The City's water supply has elevated concentrations of total dissolved solids (TDS), sulfate, and hardness that exceed Secondary Standards (i.e., nonenforceable standards based on aesthetics rather than health).

Figure 1. Planning Area, WTP Site, and Pipeline Alignments

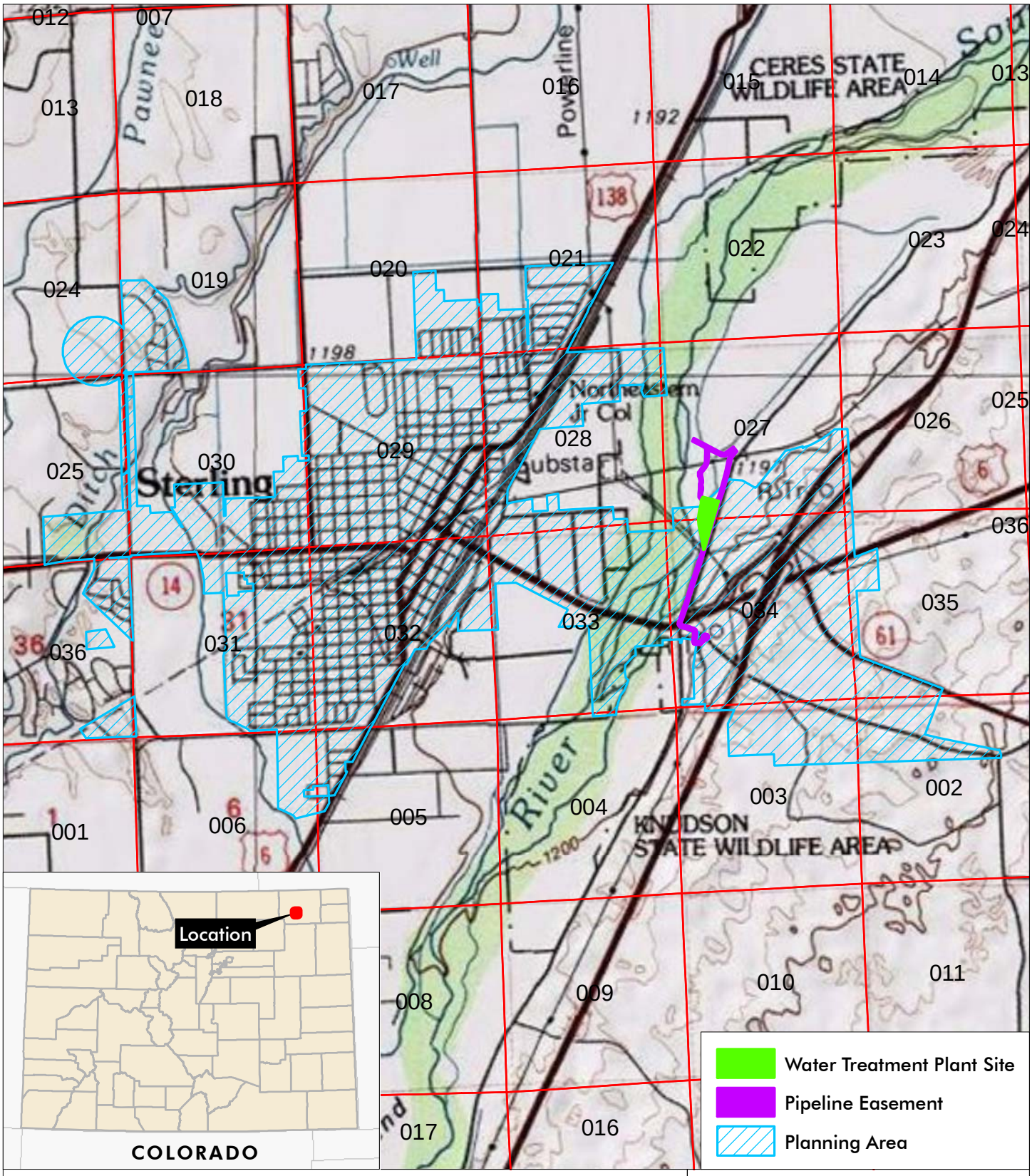

Sterling Water Treatment Plant

Sections 2, 3, 5 and 6, T7N, R52W, Sections 24-25 and 36, T8N, R53W
Sections 19-21 and 27-35, T8N, R52W, 6th PM

UTM NAD 83: Zone 13N; 654029mE, 4498721mN

Latitude, Longitude: 40.62497°N, 103.17887°W

USGS Sterling North and Sterling South, CO Quads.;
Logan County, Colorado

0 2,000 4,000 feet

1 inch = 4,000 feet

N

Figure 1
Planning Area, Water Treatment Plant Site, and Pipeline Alignments

Prepared for: Richard P. Arber Associates
File: 4417 - Figure 1.mxd [GS]
May 2009

ERO
ERO Resources Corp.

Portions of this document include intellectual property of ESRI and its licensors and are used herein under license. Copyright © 2008 ESRI and its licensors. All rights reserved.

A new water treatment plant (WTP) and associated pipelines would supply potable water for all of the City's customers. In addition to ensuring compliance with drinking water standards, the WTP would be designed to meet increased water demand through 2032. Population projections were obtained from the Colorado Department of Local Affairs (DOLA). DOLA projects population for Colorado by county. Population projections for the City were developed using the same growth rate projected by DOLA for Logan County. Figure 2 illustrates population projections for Logan County and the City of Sterling.

Figure 2. Population Projections

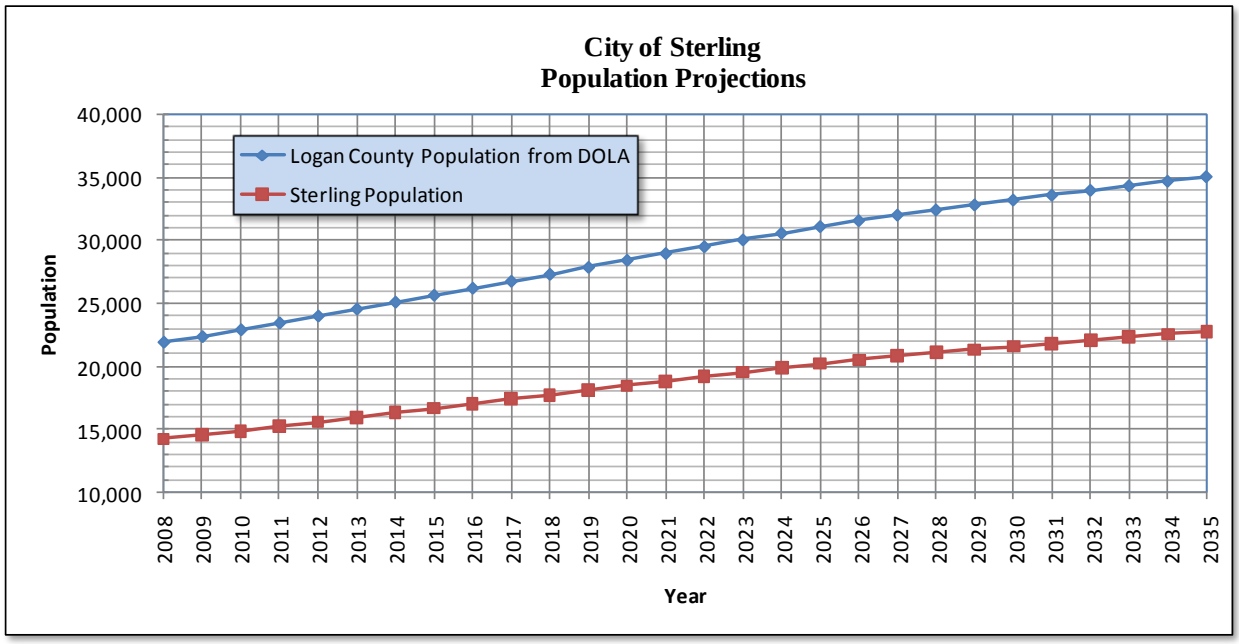

The new WTP would be designed to meet the peak day demand for the potable water system. Existing water demand was calculated based on billing and pumping data from the City of Sterling Finance Department and Public Works Department. Water demands for the City were projected to the year 2032. Figure 3 shows the average annual and peak day demands for the City.

Figure 3. Water Demand Projections

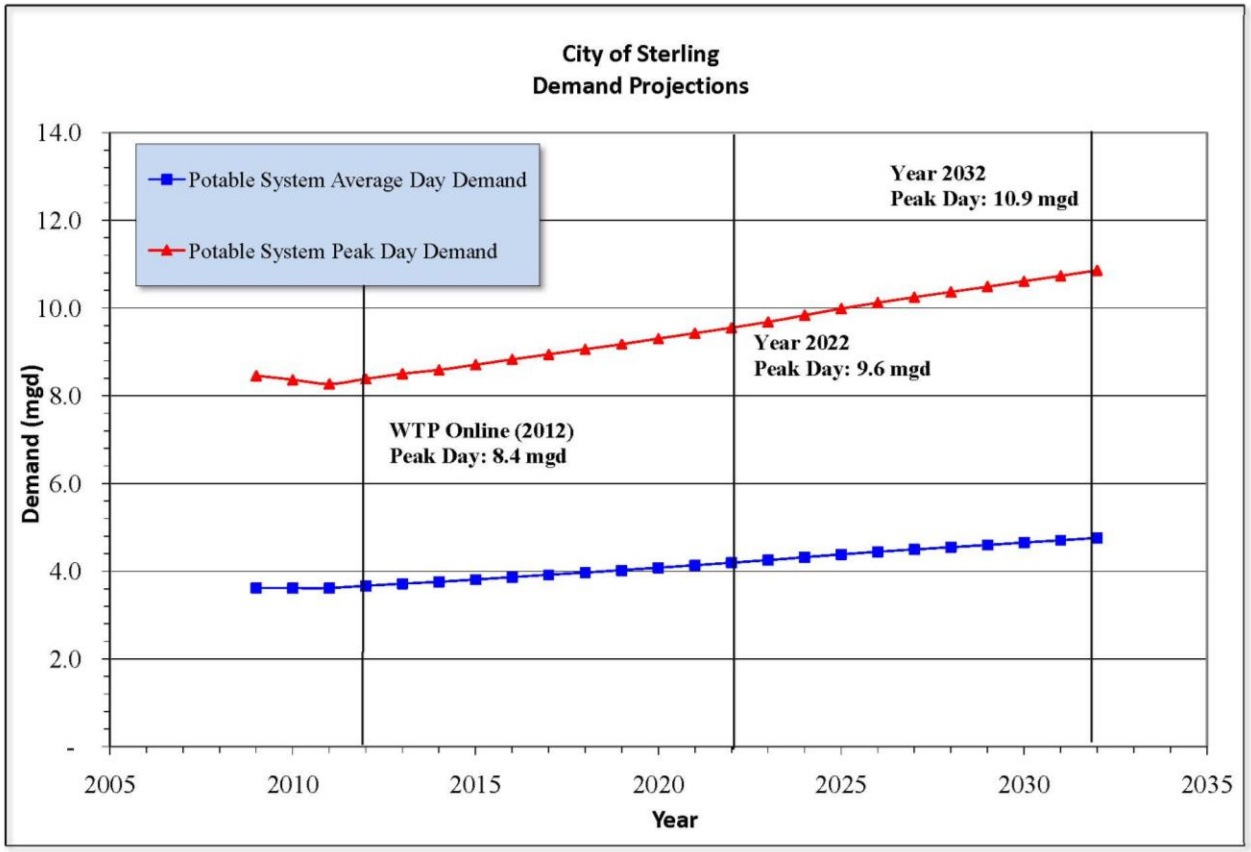

The City would fund the initial construction of the WTP through the Drinking Water State Revolving Fund (DWSRF). The U.S. Environmental Protection Agency (EPA) and CDPHE administer the DWSRF in Colorado to provide funds for drinking water infrastructure projects that are needed to comply with drinking water standards and protect public health under the 1996 Safe Drinking Water Act.

The purpose of the project is to bring the City's treated water supply into compliance with drinking water standards and address the City's water quality concerns. The project would also provide capacity for anticipated population growth. Due to challenging water quality and regulatory situations, no single technology will be adequate to address all water quality issues. A viable treatment process will include multiple technologies. The following treatment processes were evaluated:

Alternative 1a (Proposed Action) – Construct a new WTP that will use nanofiltration (NF) and microfiltration (MF) processes. Dispose of concentrate waste system in 7,000-foot-deep injection wells. Additional alternatives considered for concentrate disposal include:

Alternative 1b – Construct a new WTP that will use NF and MF processes with concentrate discharge to surface water.

Alternative 1c – Construct a new WTP that will use NF and MF processes with concentrate discharge to ground water.

Alternative 1d – Construct a new WTP that will use NF and MF processes with concentrate discharge to evaporation ponds.

Alternative 2 – Construct a new WTP using coagulation filtration with granular activated carbon (GAC). Residuals from a coagulation filtration process would be disposed of via landfill.

Alternative 3 – Construct a new WTP using lime softening followed by media filtration. Residuals from a softening process would be disposed of via landfill.

Alternative 4 (No Action Alternative) – Continue to use the existing water treatment system.

The Proposed Action, Alternative 2, and Alternative 3 would also include constructing new pipelines to convey raw water to the WTP and treated water from the WTP to the City's existing distribution system.

2.0 Description of Proposed Action (Alternative 1a)

The Proposed Action is construction of a new WTP using NF and MF processes. The Proposed Action also includes construction of pipelines and deep injection wells. The WTP would be constructed on land owned by the City on the east side of the South Platte River (Figure 1). The WTP would be supplied with water by existing alluvial wells. New raw water pipelines would be constructed to convey water from the City's existing raw water system to the WTP. In addition, a pipeline would carry concentrate water from the WTP to deep injection wells, and finished water pipelines would carry finished water from the WTP to the City's potable water system.

2.1.1 Location and Legal Description

The planning area is the current and future service area for the City's water treatment system. The planning area is located in portions of Sections 2, 3, 5, and 6, T7N, R52W; Sections 24, 25, and 36, T8N, R53W; and portions of Sections 19–21 and 27–35, T8N,

R52W in Logan County, Colorado. The proposed WTP site and the easements for the proposed pipelines are located in portions of Sections 27 and 34 of Township 8 North, Range 52 West. The planning area, the proposed WTP site, and the proposed pipeline easements are shown in Figure 1.

2.1.2 Construction and Operation of the WTP

The WTP would be constructed on land owned by the City located on the South Platte River just west of CR 370. The WTP facilities would include an office building, water treatment plant facilities, and parking area. The City is in the preliminary design phase of the project. The selected water treatment is a combination of NF and MF. NF membrane treatment is effective in removing a wide range of contaminants that are often found in water sources. The primary mechanism for contaminant removal is diffusion of water through the membrane at a higher rate than the contaminants. Electrostatic repulsion and physical straining are also important mechanisms of removal. In NF systems, the raw water is fed under high pressure to the membranes, which separates the water into a treated stream (permeate) and a waste stream (concentrate). The concentrate is a liquid waste stream that must be disposed of, and often results in substantial water loss.

Permeate from an NF process has a reduced mineral content and damages piping unless minerals are added back into the finished water. A blend stream would be used to add minerals back into the finished water. The blend stream would be filtered via MF and blended together with permeate from the NF process. The blend stream reduces capital costs of additional NF skids and chemical costs by reducing the amount of remineralization required.

The concentrate stream from the NF process would require disposal. Four alternatives were considered for concentrate disposal: 1) discharge to ground water, 2) discharge to surface water, 3) discharge to evaporation basins, or 4) discharge to deep wells. Discharge to deep wells is the preferred method to dispose of the concentrate stream.

Ground water discharge would require multiple treatment processes, dilution with wastewater effluent, and dilution with additional augmentation wells. The capital costs and

operation and maintenance (O&M) costs to meet the discharge limits make ground water discharge unpractical.

Surface water discharge is a potentially viable alternative; however, treatment processes for sulfate and selenium removal would be required to meet discharge limits, and discharge would exceed current limits for sodium. Although meetings with the CDPHE have indicated that this alternative is practicable, surface water discharge will not be pursued at this time.

Evaporation would require a significant land area of lined basins (more than 100 acres). The capital costs make evaporation basins unpractical. Additionally, the solids remaining after evaporation would need to be disposed. An analysis would need to be conducted to determine if the solids could be disposed of in a municipal landfill.

2.1.3 Construction of Raw Water Pipeline

A raw water pipeline system would be constructed to collect raw water from the alluvial wells and transport the water to the WTP. One raw water pipeline would be located within City property that starts at an existing booster pump station and would run north, parallel to the Henderson Smith Ditch, to the WTP. Another raw water pipeline would be located within City property that starts within the Scalva Property and runs south to the WTP, parallel to the Henderson Smith Ditch or parallel to County Road 370. The new WTP would be supplied with wells on the east side of the City. The wells on the west side of the City would be used for emergency purposes only, and would not supply water to the new WTP.

2.1.4 Construction of Concentrate Waste Deep Injection Wells

The concentrate stream from the NF process would be collected in a tank and pumped to deep wells. The deep wells would be located on City property and drilled to a depth of approximately 7,000 feet. The wells would be classified as Class I Deep Well Injection Wells and permitted through EPA Region 8, Underground Injection Control (UIC) Program.

2.1.5 Construction of Finished Water Pipeline

Finished water pipelines would be constructed to connect the WTP to the City's potable water system. The finished water pipelines would be constructed within a 100-foot-wide temporary construction easement. In locations where a finished water pipeline alignment is

located parallel to the raw water pipeline or concentrate waste pipeline, both pipelines would be constructed in the same temporary easement.

3.0 Alternatives to the Proposed Action

3.1 Alternative 2 – Coagulation Filtration with Granular Activated Carbon

Under Alternative 2, a WTP and water pipelines would be constructed as proposed under the Proposed Action; however, a different process (coagulation filtration and granular activated carbon) would be used for water treatment. Coagulation filtration is a two-step process. In coagulation, a positively charged metal coagulant, such as alum or iron salts, is added to the water to neutralize and destabilize negatively charged particulate, dissolved ions, and/or colloidal matter from water. The destabilized particles aggregate and enmesh into larger particles, which can then be removed by a filtration process. A number of filtration systems are available for use in the coagulation filtration process, including conventional gravity filtration through sand media, pressure vessel filtration using sand media, and membrane technology. For purposes of this evaluation, it is assumed that gravity sand media filtration would be used. Solids that accumulate in the filter are occasionally backwashed. These solids can either be discharged to the sewer or treated in sludge drying beds that separate the solids from the water and produce a solid waste to be disposed of to a landfill.

According to bench-scale testing data conducted on the City's water, none of the coagulants tested were effective for removal of total organic carbon (TOC). Therefore, a granular activated carbon (GAC) process would be necessary to remove TOC. GAC is a highly porous media with a large surface area typically manufactured from materials high in carbon such as coal, wood, coconut shells, or walnut shells. The large surface area provides a high density of active sites for sorption of organic compounds. GAC reaction columns can be manufactured to remove different types of TOC from water.

3.2 Alternative 3 – Lime Softening

Lime softening provides an effective means of lowering hardness. Lime softening would remove some total dissolved solids (TDS) from raw water; however, it is not effective in removing dissolved secondary contaminants such as sulfate and/or chloride. Lime softening

is primarily used for removing polyvalent metallic ions, such as calcium and magnesium hardness from water. The addition of lime (calcium hydroxide) or quick lime (calcium oxide), can quickly convert the calcium and magnesium into calcium carbonate and magnesium hydroxide precipitates, which can be settled out and removed in sedimentation basins.

The formation of positively charged magnesium hydroxide precipitate by elevating the pH (pH $\geq$ 11) and enhancing the softening process (referred to as enhanced softening) can provide high levels of positively charged surface area that can aid in improving organic matter reduction. Although magnesium hydroxide precipitation can provide dissolved organic matter reduction, it is not an attractive choice to many softening plants. Increases in lime dosages (to raise pH above 11) can lead to significant increases in costs, increases the amount of solids production, and requires further dewatering, which sometimes is difficult to achieve and can result in higher handling and disposal costs. After lime softening, the water is filtered. A number of filtration systems are available for use in the coagulation filtration process, including conventional gravity filtration through sand media, pressure vessel filtration using sand media, and membrane technology. The finished water requires significant pH adjustment and disinfection prior to distribution.

3.3 No Action Alternative

Under the No Action Alternative, the City would continue using the existing water treatment system. The No Action Alternative is not the preferred alternative because it does not meet the project purposes and need (compliance with the Enforcement Order).

3.4 Comparison of Alternatives

Table 1 summarizes the estimated costs of the alternatives, using an Order of Magnitude Estimate with an expected accuracy of +50 percent to –30 percent. Table 1 also shows O&M costs for the three treatment processes.

Table 1. Planning level cost comparisons.

Treatment Process	Estimated Project Cost Range (1)	Estimated Annual O&M Cost (2)
Proposed Action – NF with MF Blend Stream	$23,000,000 – $29,000,000	$3,900,000 (3)
Alternative 2 – Coagulation Filtration with GAC	$17,000,000 – $23,000,000	$3,200,000

Alternative 3 – Lime Softening	$18,000,000 – $24,000,000	$3,700,000

(1) Project costs include construction, legal and administrative costs, and engineering.
(2) O&M costs presented as annual costs (2012 dollars) and include debt service on 20-year loan at 4.5 percent.
(3) O&M costs for NF are the average between the concentrate management alternatives.

The three alternatives have varying removal capability for Primary and Secondary contaminants. Table 2 summarizes the process alternatives and the contaminant barriers provided by each.

Table 2. Barriers provided by the three alternative treatment processes.

Treatment Process	Uranium	DBP Precursors	Nitrate	Hardness	TDS	Sulfate	Filtration
Proposed Action – NF with MF Blend Stream	X	X	X	X	X	X	X
Alternative 2 – Coagulation Filtration with GAC	X	X					X
Alternative 3 – Lime Softening	X	X		X			X

As indicated in Table 2, NF provides barriers for Primary and Secondary Drinking Water contaminants and filtration. The City has indicated a strong desire to treat for Secondary Standards to increase the overall public acceptability of the finished drinking water. The Proposed Action was chosen over the other alternatives because NF treatment would meet the project purpose by meeting contaminant limits and increasing the aesthetic quality of the finished water. Although the initial capital costs and O&M costs for the NF process are higher, the need for in-home treatment systems would be significantly reduced, resulting in an overall cost savings for the citizens of Sterling.

4.0 Affected Environment/Environmental Consequences

4.1 Land Use/Important Farmland/Formally Classified Lands

4.1.1 Affected Environment

Land uses within the planning area are residential, commercial, industrial, government, agricultural, and parks. Residential land use generally occurs west of Highway 138, while industrial uses are generally located east of Highway 138, closer to the South Platte River.

Commercial uses are generally located near the center of the City, while agricultural uses are located around the edges of the planning area.

The proposed WTP site is located in a vacant lot approximately ½ mile north of U.S. Highway 6 on the west side of CR 370/Riverview Road North. The proposed water pipelines would be located within easements running parallel to CR 370 or other existing roads, or parallel to the Henderson Smith Ditch. A portion of the proposed pipeline would be located within City-owned property located north of the Burlington Northern Railroad (the Scalva Property). The proposed WTP site is currently a vacant lot that has been planted with pasture grasses. The most recent past use of the WTP site was a concrete batch plant. Land uses near the WTP site include a golf course and Colorado Department of Transportation (CDOT) facility to the east, undeveloped land along the South Platte River to the west and south, and a commercial business (self-storage) to the north. Land uses adjacent to the proposed pipelines include undeveloped land near the South Platte River, low-density residential, agriculture, a historic park, and commercial south of U.S. Highway 6.

The WTP site and the land to the north, including the Scalva Property, have been mapped as prime irrigated farmland by the U.S. Natural Resources Conservation Service (NRCS 2009). Prime farmland is defined as land that has the best combination of physical and chemical characteristics for producing food, feed, forage, fiber, and oilseed crops, and that is available for these uses.

4.1.2 *Environmental Consequences*

The Proposed Action would result in a change in land use for the WTP site. The WTP site would change from an open field to a WTP with an office building, water treatment facility, and parking lot. Approximately 10 acres of prime farmland would be converted to another use as a result of the project. Loss of farmland at the WTP site would be an unavoidable adverse impact. All impacts from construction of the pipelines would be temporary because the pipelines would be buried, and disturbed areas would be restored following construction. Approximately 4 acres of prime farmland within the pipeline easements would be temporarily disturbed during construction. No other land use changes would result directly from the Proposed Action. Under Alternatives 2 and 3, the WTP would

still be built, but would use a different treatment method; therefore, direct impacts to land use and prime farmland would be the same as the Proposed Action. There would be no direct impacts to land use or prime farmland under the No Action Alternative.

Future development within the planning area, which may occur under the Proposed Action or Alternatives 2 and 3, would result in changes in land use as more agricultural land is developed for residences or businesses. There would be no secondary effects to land use or prime farmland under the No Action Alternative.

4.1.3 Mitigation

The following mitigation measure would be followed for land use under the Proposed Action:

- Existing rights-of-way would be used to the maximum extent practicable for construction of the pipelines.

4.2 Floodplains

4.2.1 Affected Environment

Federal Emergency Management Agency (FEMA) designated floodplains are located within the planning area. The proposed WTP site and pipeline alignments are located east of the South Platte River. Current information indicates the WTP site is not within the 100-year floodplain boundary of the South Platte River; however, a study is currently under way to refine the location of the floodplain boundary near the WTP site.

4.2.2 Environmental Consequences

The direct impacts to the 100-year floodplain at the WTP site from the Proposed Action and Alternatives 2 and 3 are not known at this time, but no buildings would be constructed within the 100-year floodplain at the WTP site. Construction of the proposed water lines would have no permanent impact on the 100-year floodplain because the water lines would be buried. The No Action Alternative would have no effect on the floodplain.

The Proposed Action and Alternatives 2 and 3 may indirectly affect the floodplain within the planning area due to changes in the volume of water conveyed by the floodplain. Overall, the Proposed Action and Alternatives 2 and 3 would not result in increased flows, and are not expected to adversely affect the floodplain.

4.2.3 Mitigation

No mitigation is proposed or needed for floodplains.

4.3 Wetlands

The Clean Water Act (CWA) was passed in 1972 to protect the physical, biological, and chemical quality of waters of the U.S. (rivers, streams, ponds, lakes, and wetlands). The U.S. Army Corps of Engineers' (Corps) Regulatory Program administers and enforces Section 404 of the CWA, which regulates the discharge of dredge or fill material into waters of the U.S., including adjacent wetlands. Under Section 404, a Corps permit is required for the discharge of dredge or fill material into wetlands and other waters subject to Corps' jurisdiction. Waters of the U.S. are defined broadly in Corps regulations to include a wide variety of waters and adjacent wetlands. The Corps defines "wetlands" as "those areas that are inundated or saturated by surface or ground water at a frequency and duration sufficient to support, and that under normal circumstances do support, a prevalence of vegetation typically adapted for life in saturated soil conditions." Wetlands generally include swamps, marshes, bogs, and similar areas (33 CFR 328.3(b)). Compensatory wetland mitigation for unavoidable adverse impacts, which remain after all appropriate and practicable avoidance and minimization has been achieved, would likely be required for this project. The Corps determines a water to be subject to its jurisdiction if "the water body is a traditionally navigable water, if the water body is relatively permanent, if the water body is a wetland that directly abuts a traditionally navigable or relatively permanent water body, or if a water body, in combination with all wetlands adjacent to that water body, has a significant nexus with traditionally navigable waters" (Corps and EPA 2007).

Federal agencies have responsibilities to avoid, minimize, and mitigate unavoidable impacts on wetlands under Executive Order (EO) 11990. EO 11990 requires federal agencies to "consider factors relevant to a proposal's effect on the survival and quality of the wetlands." EO 11990 requires that adverse effects on wetlands and other waters of the U.S. be avoided, where possible, in implementing federal actions.

4.3.1 Methods

Data on wetland resources were obtained from the National Wetland Inventory (NWI) maps produced by the U.S. Fish and Wildlife Service (Service) and field observations

(Figure 4 and Figure 5). ERO conducted a site visit on May 6, 2009 (2009 site visit) to identify other wetlands within the proposed WTP site and proposed pipeline easements.

Figure 4. NWI Wetlands in the Planning Area

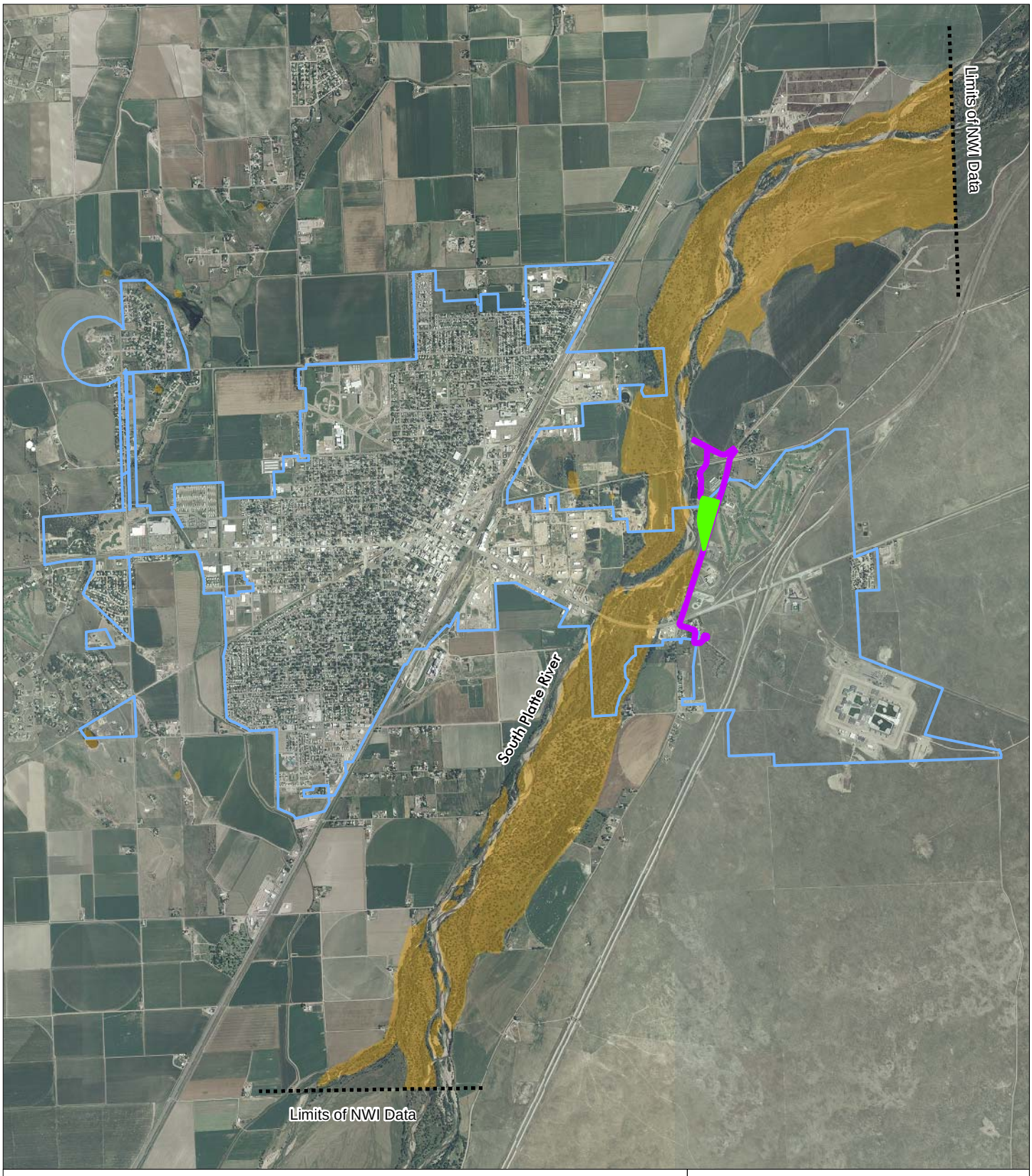

Sterling Water Treatment Plant

Pipeline Easement

Water Treatment Plant Site

Planning Area

NWI Wetlands

Image Source: USGS, Sept. 9, 2005

0 2,000 4,000 feet

1 inch = 4,000 feet

N

Figure 4
National Wetland Inventory Wetlands

Prepared for: Richard P. Arber Associates
File: 4417 - Fig 4 NWI Wetlands.mxd [GS]
May 2009

ERO
ERO Resources Corp.

Figure 5. Wetlands near the WTP Site and Pipeline Alignments

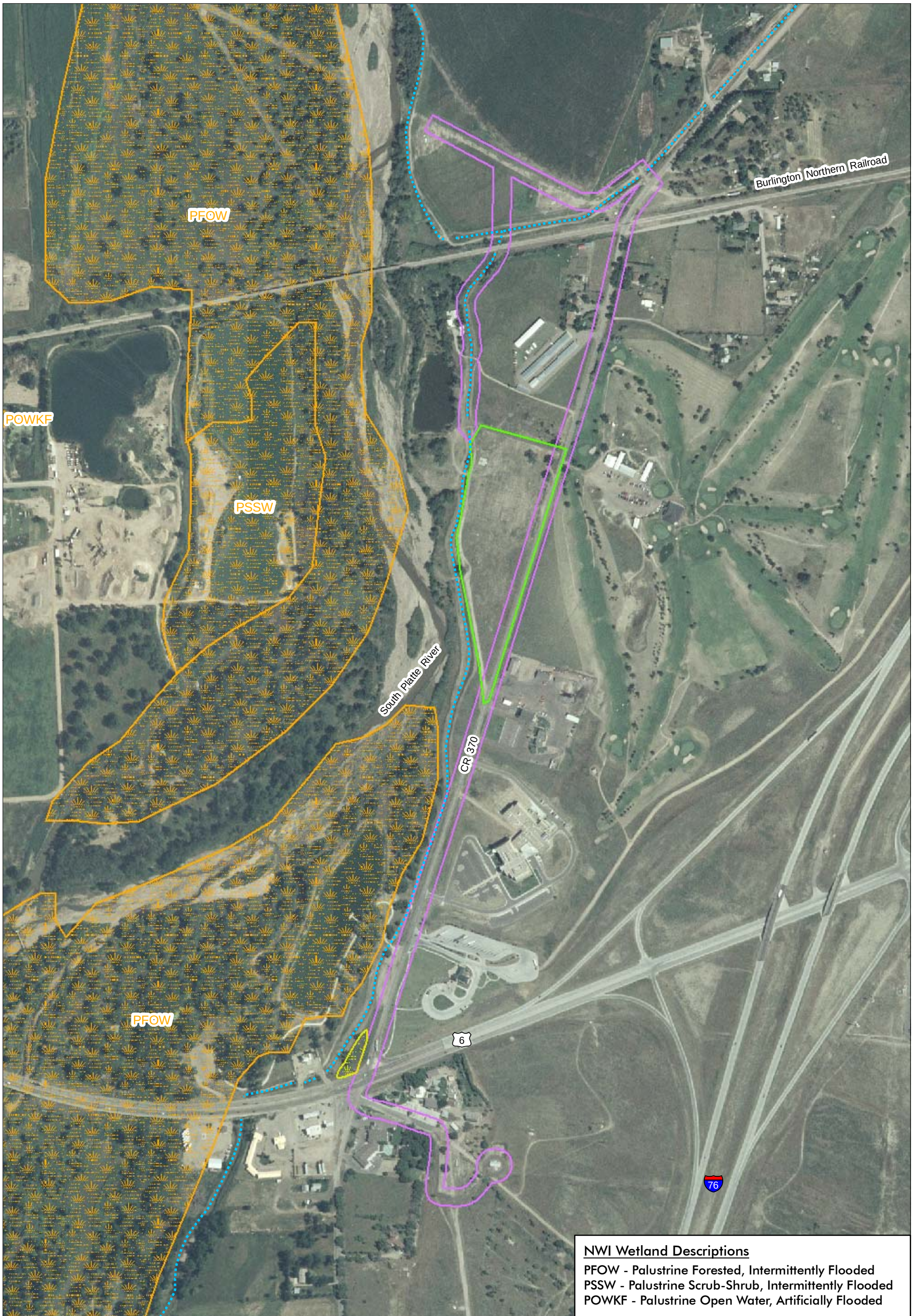

Sterling Water Treatment Plant

- Wetland Mapped by ERO
- NWI Wetlands
- Henderson-Smith Ditch
- Pipeline Easement
- Water Treatment Plant Site

Image Source: USGS, Sept. 9, 2005

0 250 500 feet
1 inch = 500 feet
N

Figure 5
Wetlands - WTP Site
and Pipeline Alignments

Prepared for: Richard P. Arber Associates
File: 4417 - Fig 5 Wetlands.mxd (GS)
May 2009

ERO
ERO Resources Corp.

Wetlands in areas that may be directly impacted by the proposed project were delineated following guidelines in the 1987 *Corps of Engineers Wetlands Delineation Manual* (Corps 1987) and mapped in the field onto aerial photography. The boundaries of wetlands within the planning area that may be impacted were drawn onto aerial photographs and digitized onto aerial photography using Geographic Information System (GIS) software.

For its NWI mapping, the Service uses a series of letter and number codes that correspond to the classification nomenclature developed by Cowardin et al. (1979) to classify wetlands and open water habitats. NWI maps are prepared from interpretation of high altitude imagery, and wetlands are identified based on vegetation, visible hydrology, and geography. A margin of error is inherent in the use of imagery.

4.3.2 Affected Environment

NWI mapping is useful at a broad scale within the planning area, but is not detailed enough to show wetlands that could be directly affected by the project. NWI mapping shows several types of wetlands in the planning area, including forested, intermittently flooded wetlands; scrub/shrub intermittently flooded wetlands; and riverine lower perennial open water along the South Platte River. NWI mapping (based on 1975 photography) is not detailed or current enough to determine site-specific conditions for the WTP site and pipeline easements.

On the ground, wetland surveys found wetlands present in two areas within the proposed pipeline easements—along the fringes of the Henderson Smith Ditch and in a low area northwest of the intersection of CR 370 and U.S. Highway 6. No wetlands occur at the proposed WTP site.

Henderson Smith Ditch has with steep (1 to 1 slope) banks and a sandy channel about 5 feet wide. In general, the banks of the ditch are unvegetated due to periodic maintenance. A narrow 1-foot-wide fringe of wetland vegetation is present at the toe of the banks in several places. Wetland species present include Emory's sedge (*Carex emoryi*), reed canarygrass (*Phalaroides arundinacea*), and curly dock (*Rumex crispus*). A few Siberian elms (*Ulmus pumilis*) are also present along the top of the banks of the ditch. Flowing water was present in the channel at the site during the 2009 site visit. The Corps has previously determined that

the Henderson Smith Ditch is not a jurisdictional water of the U.S. (Corps File No. 200380224); therefore, no Section 404 permit would be required for work in the ditch.

A sandbar willow- (*Salix exigua*) dominated wetland occurs in a low area between CR 370, U.S. Highway 6, and the Henderson Smith Ditch. The understory vegetation in this wetland is a sparse mixture of poison hemlock (*Conium maculatum*), catnip (*Nepeta cataria*), curly dock, and Canada thistle (*Breea arvensis*). This wetland is adjacent to the Henderson Smith Ditch, and is most likely not a jurisdictional wetland because it is separated from the river by the ditch, which is not jurisdictional.

4.3.3 Environmental Consequences

Under the Proposed Action and Alternatives 2 and 3, pipelines would cross the Henderson Smith Ditch near the northern end of the pipeline alignment, at a point where no wetlands are present. Impacts to the ditch would be temporary, and surface contours would be restored to preexisting conditions following construction. Because the Henderson Smith Ditch is not jurisdictional, no permit would be required for impacts to the ditch. The sandbar willow wetland located between CR 370 and the Henderson Smith Ditch would be affected by construction of the water pipelines. Construction of the water pipelines would require excavation of a trench through the wetland during construction, followed by restoration of the surface contours after construction. Impacts to this wetland would be temporary and would result from removal of vegetation during construction. The sandbar willow wetland is probably not under the jurisdiction of the Corps; therefore, a Section 404 permit probably would not be required. If the wetland is jurisdictional, the water pipeline installation would be authorized under Nationwide Permit 12. There would be no impacts to wetlands under the No Action Alternative.

Secondary wetland impacts within the planning area may result from increased development or changes in land use in the planning area under the Proposed Action, Alternative 2, and Alternative 3. Increased development typically increases stormwater runoff into streams, creating higher volumes and velocities than normal. Often streams downcut and become incised. This process can lead to increased sedimentation, a loss of wetland or riparian vegetation along the banks, and lower water quality. When stream

systems become degraded, exotic plant species often become more prevalent. The No Action Alternative would not result in any additional wetland impacts.

4.3.4 Mitigation

The following mitigation measures would be implemented for impacts to wetlands from the Proposed Action:

- Wetland impacts would be avoided and minimized to the extent practicable. Because wetlands affected by the Proposed Action are likely nonjurisdictional, no compensatory mitigation is proposed.
- Stormwater management plans required for new development would mitigate the adverse effects of increased runoff from impervious surfaces.

4.4 Cultural Resources

The National Historic Preservation Act (NHPA) of 1966, as amended (16 U.S.C. §§ 470 *et seq.*), and the Advisory Council on Historic Preservation's (ACHP) implementing regulations, 36 CFR Part 8000 (Section 106 regulation), require federal agencies to take into account the effect their actions may have on historic properties that are within the proposed project's area of potential effect (APE). This evaluation must take place prior to carrying out such actions. The APE is the geographic area or areas within which a proposed project may cause changes in the character or use of historic properties. A historic property is any prehistoric or historic district, site, building, or object included in, or eligible for inclusion in, the National Register of Historic Places (NRHP). A historic property includes, for the purposes of the Section 106 regulation, artifacts, records, and remains that are related to and located within such properties. The term "eligible for inclusion in the National Register" includes both properties formally determined eligible by the Secretary of the Interior and all other properties that meet the NRHP listing criteria (RD/RUS Bulletin 1794A-602, Version 1.0, revised 1998:23-24).

Cultural resources are evaluated for their eligibility to be listed in the NRHP based on integrity and significance criteria. NRHP integrity standards and significance criteria are codified under 36 CFR 60.4. Any cultural resources within the proposed project APE would need to be evaluated based on these criteria. In addition, sites evaluated as eligible must retain physical integrity. Eroded or otherwise heavily disturbed sites are generally not

considered eligible. Sites evaluated as needing data are those sites that may conform to the eligibility criteria, but require further work to determine NRHP significance. In most cases, these sites are prehistoric or historic sites with suspected buried cultural material or historic sites where additional archival research is necessary to determine historical context and overall significance. Sites that are evaluated as not eligible do not meet any of the eligibility criteria and/or have lost physical integrity.

Because the project involves a ground-disturbing action, all cultural resources should be evaluated for potential adverse effects as codified under 36 CFR 800.5. Effects may be "no effect," "no adverse effect," or "adverse effect," depending on the type of anticipated disturbance. Determinations of effect must take into account the action involved and may be "beneficial" if the action has the potential to further preserve the cultural resource.

Eligibility recommendations and determinations of effect (DOE) must be concurred with by both the lead federal agency (EPA), and the State Historic Preservation Officer (SHPO).

4.4.1 Affected Environment

To determine whether previous cultural resource inventories have been conducted or whether cultural resources have been previously documented within the planning area, ERO requested that the Colorado Historical Society, Office of Archaeology and Historic Preservation (CHS OAHP) conduct a Class I file and literature review for the project APE and the planning area. A shape file of the project APE boundary was submitted to the CHS OAHP with a request for a file search on May 11, 2009, and the results of the file search were submitted electronically to ERO on May 14, 2009. Those cultural resources eligible, potentially eligible, or listed in the NRHP within the APE require consideration for potential adverse impacts. A shape file for the project planning area boundary was submitted to CHS OAHP on May 19, 2009, and the results of the file search were returned electronically to ERO on May 26, 2009.

The Class I review of the proposed project APE resulted in the identification of four previous cultural resource inventories conducted in the planning area (Table 3). These inventories were conducted for the Western Area Power Administration and the City of Sterling. These surveys were for the City of Sterling and the DOE Western Area Power

Administration survey of structures on the Beaver Creek-Sterling 115 kV transmission line and an evaluation of transmission lines within Colorado, Wyoming, Nebraska, and Utah for the development of a cultural context for electrical transmission in the western U.S. U.S. Highway 6 was documented during the development of a history and cultural context of Colorado's highway system, but was not specifically surveyed within the project area.

Table 3. Previous cultural surveys in the project APE.

Survey Report No.	Project	Cultural Resources
MC.E.R41	ELECTRICAL DEVELOPMENT IN THE UNITED STATES EMPHASIZING ACTIVITIES IN COLORADO, WYOMING, NEBRASKA, AND UTAH	1
LO.LG.R1	CULTURAL RESOURCE INVENTORY REPORT STERLING FACILITIES PLAN FOR THE CITY OF STERLING, COLORADO	None
MC.SHF.R85	FINAL HIGHWAYS TO THE SKY: A CONTEXT AND HISTORY OF COLORADO'S HIGHWAY SYSTEM, MULTIPLE COUNTIES	1
none	A CLASS III CULTURAL RESOURCE INVENTORY OF THE PROPOSED REPLACEMENT OF TRANSMISSION LINE STRUCTURES ON THE BEAVER CREEK-STERLING 115 KV TRANSMISSION LINE, MORGAN, WASHINGTON, AND LOGAN COUNTIES, COLORADO	1

Three cultural resources were located and documented during the inventories (Table 4). The Beaver Creek-Sterling 115 kV Transmission Line (5LO442) crosses the northern portion of the project APE, and has been determined officially not eligible for inclusion to the NRHP (Figure 6). U.S. Highway 6 (5LO471.1) crosses the southern end of the project APE, and although U.S. Highway 6 is officially eligible for inclusion to the NRHP, the segment within the project APE has not been specifically evaluated. The Sterling CCC camp (5LO684), which overlaps the southern end of the project APE, has also been officially determined eligible for inclusion to the NRHP. Although it was not included in the file search results, the Burlington Northern Railroad (5LO572) crosses the northern portion of the project APE, and this railroad has been determined officially eligible for inclusion to the NRHP.

Figure 6. Cultural Resources near the WTP Site and Pipeline Alignments

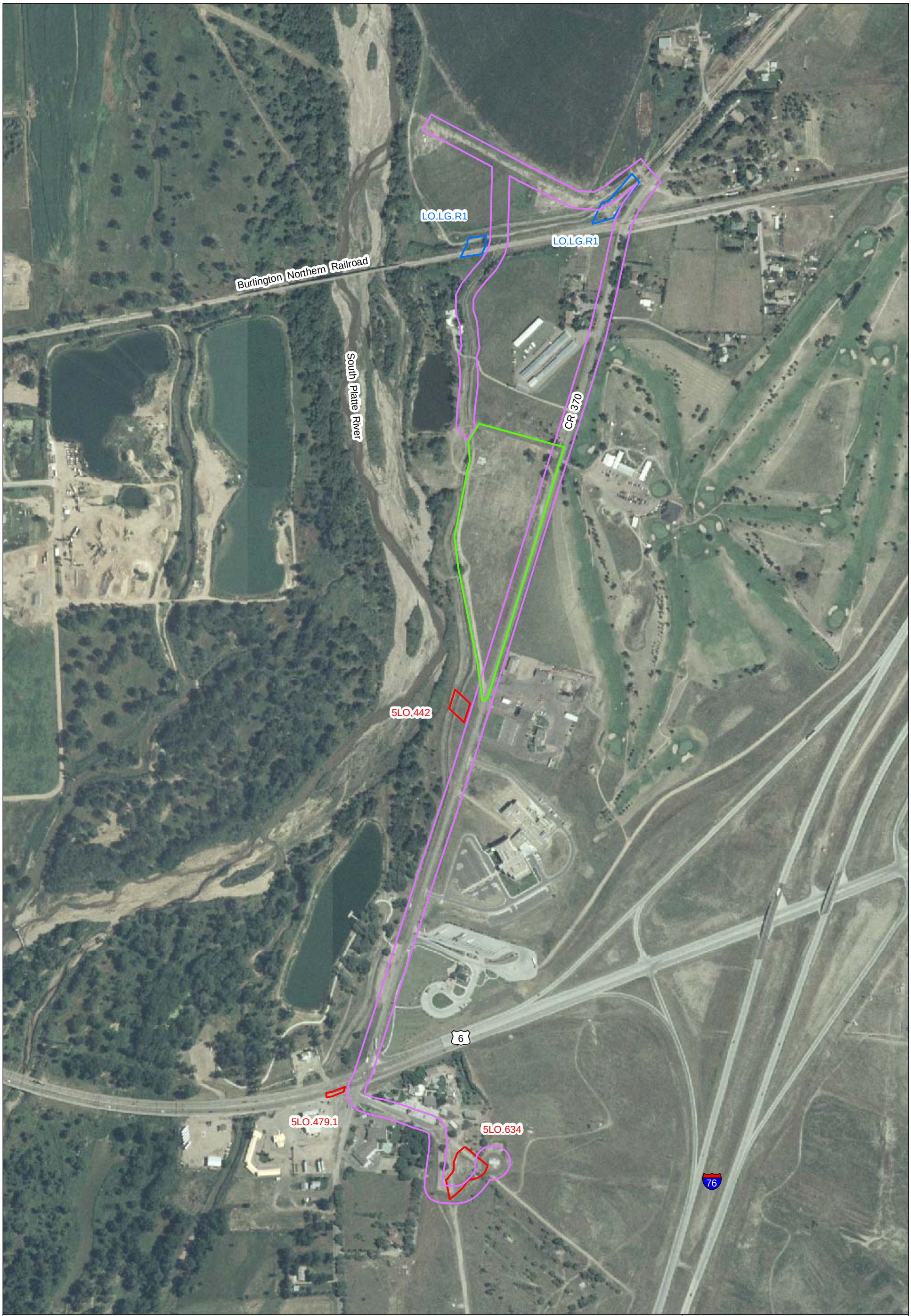

Sterling Water Treatment Plant

- Cultural Survey
- Cultural Site
- Pipeline Easement
- Wastewater Treatment Plant Site

Image Source: USGS, Sept. 9, 2005

0 250 500 feet
1 inch = 500 feet
N

Figure 6
Cultural Resources

Prepared for: Richard P. Arber Associates
File: 4417 - Fig 6 Cultural.mxd (GS)
May 2009

ERO
ERO Resources Corp.

Portions of this document include intellectual property of ESRI and its licensors and are used herein under license. Copyright © 2008 ESRI and its licensors. All rights reserved.

Table 4. Previously recorded archaeological resources in the project APE:

Site No.	Site Type	Identification	NRHP Eligibility Status
5LO442	Historical	Beaver Creek-Sterling 115 kV Transmission Line	Officially Not Eligible
5LO471.1	Historical	U.S. Highway 6	Officially Eligible
5LO684	Historical	Sterling Civilian Conservation Corps Camp	Officially Eligible
5LO572	Historical	Burlington Northern Railroad	Officially Eligible

Because the Beaver Creek-Sterling 115 kV Transmission Line has been determined officially not eligible for inclusion to the NRHP, ERO recommends that no further work is needed on the site. Because U.S. Highway 6 (5LO471.1), the Sterling CCC camp (5LO684), and the Burlington Northern Railroad (5LO572) are all officially eligible for inclusion to the NRHP, ERO recommends that the potential impacts of the current project to these resources be evaluated and alternative designs considered. Any impacts to U.S. Highway 6 and the Burlington Northern Railroad cannot be evaluated until the segments of these sites within the current project APE have been recorded and their contribution to the overall eligibility of their respective sites has been determined. Therefore, ERO recommends that the unrecorded segments of U.S. Highway 6 and the Burlington Northern Railroad be recorded and evaluated prior to a DOE.

In order "to fully support a cultural resources review, it is necessary to identify all historic properties within the proposed project's defined area of potential effect" (RD/RUS Bulletin 1794A-602, Version 1.0, revised 1998:24). Because the area contained within the project APE boundary has only been partially inventoried for cultural resources, the Colorado SHPO considers its records for the area incomplete. In the letter that accompanied the results of the file search, the Deputy SHPO for Archaeology stated there is a possibility that unidentified cultural resources exist within the proposed APE and recommended that a Class III cultural resource inventory be conducted to locate unknown cultural resources (Collins, pers. comm. 2009). Examination of aerial photos of the project APE suggests that the Henderson Smith Ditch may be impacted by the current project. This ditch has not been recorded, but with an appropriation date of 1873 and adjudication date of 1894, it meets the age criterion and should be recorded and evaluated as a historic site. Because the unrecorded segments of the NRHP-eligible U.S. Highway 6 and the Burlington Northern Railroad need

to be recorded and evaluated, the Henderson Smith Ditch also should be recorded, and effects of the project on these resources, as well as the Sterling CCC camp, should be evaluated during field visits. ERO recommends that a Class III survey be performed in conjunction with recording the identified sites other work within the project APE to locate any unrecorded historic properties that could be affected by project activities.

Results of the official Class I review of the much larger proposed project planning area are not yet available, but an online search of the planning area indicates at least nine previous surveys have been performed in the planning area. There are 81 cultural resources recorded within the planning area, and of these, at least 10 are listed on the NRHP and dozens more are determined officially eligible for inclusion on the NRHP. This information will be compiled in the final EA as Appendix XX. It is assumed that the current project will not have an effect on any of these resources, and ERO recommends that no further work is required.

4.4.2 Environmental Consequences

As presently designed, the Proposed Action could potentially affect three known historic properties. However, most of the proposed Sterling WTP project APE has not been investigated for cultural resources, and the actual number and eligibility status of cultural resources within the proposed APE is unknown; therefore, a full DOE on cultural resources is not possible. Although the areas of direct impact in the current project design are limited, future development in the planning area could be an indirect effect on cultural resources that may also require future cultural resource clearance.

4.4.3 Mitigation

Mitigation of adverse effects to the three known historic properties may be necessary under current design plans, and the eligibility of the Henderson Smith Ditch is currently unknown and, therefore, any potential effects to this resource remain undetermined pending recording and evaluation for NRHP eligibility. Other historic properties may be present in the project APE, but given the existing information, it is unknown whether any additional historic properties may require mitigation.

4.5 Visual Aesthetics

4.5.1 Affected Environment

The most significant visual resource within the planning area is the riparian corridor of the South Platte River. The proposed WTP site is visible from CR 370, and the riparian corridor of the river is visible behind the plant site from CR 370. The proposed WTP site is not visible from U.S. Highway 6 or from I-76, although portions of the proposed pipeline easement are visible from U.S. Highway 6.

4.5.2 Environmental Consequences

The Proposed Action and Alternatives 2 and 3 would have negligible effects on visual resources because the proposed WTP would be visible only from CR 370, and the proposed water lines would be buried. For vehicles travelling along CR 370, the proposed WTP would block views of a short section of the riparian corridor along the river. There would be no other permanent impacts to visual resources because the proposed water lines would be buried.

Some temporary construction impacts to visual resources would result from the Proposed Action. These impacts would include the presence of construction vehicles along the alignment, possibly some nighttime construction lighting, construction access roads, and fugitive airborne dust. Future development could indirectly affect visual resources, especially unobstructed views of the riparian corridor along the river. The No Action Alternative would have no effect on visual resources.

4.5.3 Mitigation

The following mitigation measures would be implemented to avoid, minimize, and mitigate impacts to visual resources from the Proposed Action:

- Affected areas would be restored as soon as possible following construction, especially areas associated with roads and within residential and commercial areas.
- Construction access roads, staging areas, and disturbed areas would be reclaimed by restoring existing grade and revegetating the area of disturbance.
- Water would be applied with standard construction practices to control airborne fugitive dust.

- Baffles on construction lighting fixtures would be installed to direct light onto construction activities only.

4.6 Biological Resources

Projects involving a federal nexus must comply with federal and state laws and regulations protecting wildlife species including:

- Endangered Species Act of 1973, as amended (16 USC 1531 et seq.)
- Bald and Golden Eagle Protection Act of 1940, as amended (16 USC 668-668d)
- Fish and Wildlife Coordination Act of 1934, as amended (16 USC §§ 661-667e)
- Migratory Bird Treaty Act of 1918, as amended (16 USC §§ 703-712)
- Executive Order 13186 Responsibilities of Federal Agencies To Protect Migratory Birds
- Colorado wildlife statutes concerning nongame and endangered species conservation (Title 33, Article 2, C.R.S. (2007))

Federally listed threatened and endangered species are protected under the Endangered Species Act of 1973, as amended (ESA). Potential effects from a project on a federally listed species or its habitat resulting from a project with a federal action require consultation with the Service under Section 7 of the ESA. Modification of designated critical habitat for a federally listed species also requires consultation with the Service.

The Fish and Wildlife Coordination Act requires the federal action agency to consult with the Service and Colorado Division of Wildlife (CDOW) on issues related to conservation of wildlife resources for federal projects resulting in modifications to waters or channels of a body of water (16 USC §§ 661-667e).

Migratory birds, including raptors and active nests, are protected under the Migratory Bird Treaty Act (MBTA). The MBTA prohibits activities that result in taking, killing, or possessing migratory birds and their eggs. Possession of any nest and destruction (without possession) of active nests that results in the loss of eggs or young is also prohibited (16 USC §§ 703-712). Executive Order 13186 directs federal agencies to take certain actions to implement the MBTA (86 Fed. Reg. 3853).

The Bald and Golden Eagle Protection Act (BGEPA) (16 USC 668-668d) includes several prohibitions not found in the MBTA, such as molestation or disturbance. In 1962, the BGEPA was amended to include the golden eagle. In 2007, the term "disturb" was defined to mean "to agitate or bother a bald or golden eagle to a degree that causes injury to an eagle, a decrease in productivity, or nest abandonment, by substantially interfering with normal breeding, feeding, or sheltering behavior (72 Fed. Reg. 31332).

As directed by Colorado Revised Statute 33 [(Title 33, Article 2, C.R.S. (2007)], the CDOW issues regulations and develops management programs implemented by CDOW for wildlife species not federally listed as threatened or endangered. This includes maintaining a list of state threatened and endangered species. CDOW also maintains a list of species of special concern, but those species are not protected under Colorado wildlife statutes concerning nongame and endangered species conservation [(Title 33, Article 2, C.R.S. (2007)]. Although Statute 33 prohibits the take, possession, and sale of a state-listed species, it does not include protection of their habitat.

4.6.1 Methods

Assessment of current habitats include a review of existing information available from CDOW, the Natural Diversity Information System (NDIS), the Colorado Natural Heritage Program (CNHP), and the Service, as well as a site visit to identify and address any potential issues associated with direct impacts from construction of project facilities. The following sections discuss threatened, endangered, and candidate species as well as sensitive or rare species, migratory birds, and large game that may be found within the planning area.

4.6.2 Federal- and State-listed Species and Colorado Species of Concern

4.6.2.1 Affected Environment

The Service lists several threatened and endangered species with potential habitat in Logan County, or potentially affected by projects in Logan County (Table 5). Additionally, several species listed by Colorado as state threatened, endangered, or species of special concern are known to occur or have the potential to occur in the planning area.

Table 5. Federal or state threatened, endangered, and candidate species or state species of special concern potentially found in Logan County.

Common Name	Scientific Name	Status*	Habitat	Potential for Effects within Planning Area
Mammals				
Black-tailed prairie dog	*Cynomys ludovicianus*	SC	Shortgrass prairie	Low – Potential habitat present in planning area, but not present at WTP site
Northern river otter	*Lutra canadensis*	ST	Riparian habitats with permanent water	Low – South Platte River is potential habitat, but otters are not known to occur (CNDIS 2009)
Swift fox	*Vulpes velox*	SC	Shortgrass prairie	Low – Low quality habitat
Birds				
Bald eagle	*Haliaeetus leucocephalus*	ST	Trees near rivers, lakes; forages in open water, at times in prairie dog towns	Low – No known roosts or nests in planning area (CNDIS 2009)
Ferruginous hawk	*Buteo regalis*	SC	Shortgrass prairie in northwestern and eastern Colorado	Low – Limited suitable habitat
Greater sandhill crane	*Grus canadensis tabida*	SC	Mudflats around reservoirs, moist meadows, and agricultural areas in eastern Colorado; Grand Valley	None – No suitable habitat
Least Tern (interior population)	*Sternula antillarum*	FE, SE	Platte River in Nebraska	Potentially affected by depletions
Long-billed curlew	*Numenius americanus*	SC	Nesting occurs in shortgrass prairies in southeastern Colorado but requires lakes or reservoirs nearby for foraging	None – No suitable habitat
Mountain plover	*Charadrius montanus*	SC	Shortgrass prairie in eastern plains and mountain valleys	Low – Low quality habitat in planning area
Piping plover	*Charadrius melodus*	FT, ST	Platte River in Nebraska	Potentially affected by depletions
Plains sharp-tailed grouse	*Tympanuchus phasianus jamesii*	SE	Short- and mid-grass prairie in Douglas and northern Weld counties	None – Not within known range of the species (CNDIS 2009)

Common Name	Scientific Name	Status*	Habitat	Potential for Effects within Planning Area
Whooping crane	*Grus americana*	FE, SE	Platte River in Nebraska	Potentially affected by depletions
Western burrowing owl	*Athene cunicularia*	ST	Prairie dog colonies	Low – Low probability to occur in planning area, not present at WTP site
Western snowy plover	*Charadrius alexandrius nivosus*	SC	Shores of lakes and reservoirs	None – No suitable habitat
Fish				
Pallid sturgeon	*Scaphirynchus albus*	FE	Platte River in Nebraska	Potentially affected by depletions
Amphibians				
Northern leopard frog	*Rana pipiens*	SC	Wetlands and other aquatic habitat	Moderate – Suitable open water present
Plains leopard frog	*Rana blairi*	SC	Wetlands and other aquatic habitat	Moderate – Suitable open water present
Reptiles				
Common gartersnake	*Thamnophis sirtalis*	SC	Marshes, ponds, and edges of streams	Moderate – Suitable open water present

*FT = Federally Threatened Species, FE = Federally Endangered Species, FC= Federally Candidate Species, SE = Colorado Endangered Species, ST = Colorado Threatened Species, SC = Colorado Species of Special Concern
Source: Service 2008; CDOW 2008; CNHP 2009.

A search of the CNHP database did not identify any known occurrences of species that have been described as rare, vulnerable, or imperiled (S1 and S2) in Colorado by the CNHP. The plains cottonwood (*Populus deltoides*) riparian woodland community along the South Platte River within the planning area provides wildlife habitat for a variety of species and is ranked S3 by the CNHP (CNHP 2009). Communities ranked S3 by CNHP are considered vulnerable (21 to 100 occurrences) but not imperiled within Colorado.

4.6.2.2 Environmental Consequences

The Proposed Action and Alternatives 2 and 3 would not affect the greater sandhill crane, long-billed curlew, western snowy plover, and plains sharp-tail grouse because they have no potential to occur in the planning area due to a lack of suitable habitat or because the planning area is outside the known range of the species. The Proposed Action and Alternatives 2 and 3 are unlikely to affect the black-tailed prairie dog, swift fox, ferruginous hawk, mountain plover, and western burrowing owl because these species are unlikely to

occur and, if present, would occur only in agricultural lands on the periphery of the planning area. The bald eagle is likely to occasionally forage in riparian habitat along the South Platte River; however, the Proposed Action and Alternatives 2 and 3 are unlikely to affect this species because there are no known roosts or nests within 1 mile of the planning area (CNDIS 2009). The northern river otter historically occurred in the South Platte River; however, there are no known recent occurrences of this species in or near the planning area (CNDIS 2009). The northern leopard frog, plains leopard frog, and common gartersnake potentially occur along the South Platte River and could be affected by loss of habitat if the Proposed Action and Alternatives 2 and 3 result in impacts to wetlands or riparian habitat.

The Platte River species (least tern, piping plover, whooping crane, and pallid sturgeon) do not occur in the planning area, but could be affected by depletions to the Platte River system. The Proposed Action would result in new depletions to the South Platte, totaling 877 acre feet by the year 2032. Because the Proposed Action involves depletions to the South Platte River, consultation with the Service under Section 7 of the ESA and preparation of a Biological Assessment (BA) would be required to address impacts to the Platte River species. There are two potential pathways for Section 7 consultation with the Service. One path would involve the City joining the South Platte Water Related Activities Program (SPWRAP) and preparing a streamlined BA for submittal to the Service. Upon completion and acceptance of the streamlined BA, the Service can issue a 'tiered Biological Opinion' (BO) to the EPA (the lead federal agency) documenting that the project's depletions are covered by SPWRAP and are not likely to jeopardize the continued existence of the Platte River species.

The second option would be for the City to offset their depletions through a stand-alone consultation with the Service that does not involve SPWRAP. In this case, a BA would be prepared with additional information such as timing, magnitude, and frequency of the depletions. Project-specific conservation measures would be required to offset the adverse effects on the Platte River species.

It is unknown at this time which path will be used for consultation with the Service. Project-specific consultation is likely to be a more costly and time-consuming process for the

City and for the federal agencies involved compared to participation in SPWRAP; however, both pathways are proven methods for addressing impacts to Platte River species.

Overall, Alternatives 2 and 3 would result in impacts similar to the Proposed Action. Alternatives 2 and 3 would result in depletions to the South Platte River and would require consultation with the Service, although depletions would be less than the Proposed Action. The No Action Alternative would have no effect on federal- and state-listed species and Colorado species of concern.

4.6.2.3 Mitigation

The following mitigation measures would be followed to avoid and minimize impacts to federal- and state-listed species as well as other species of special concern under the Proposed Action:

- The Contractor would conform to best management practices (BMPs) and state and federal guidelines to minimize short- and long-term effects on wildlife.
- All disturbed areas would be promptly revegetated with native species.
- Secondary impacts to Platte River species resulting from water depletions would be addressed through consultation with the Service as described above.

4.6.3 Raptors and Migratory Birds

4.6.3.1 Affected Environment

The planning area is primarily residential, commercial, and industrial development, although grassland, riparian, aquatic and wetland habitats are also present. All of these areas provide nesting and foraging habitat for many different species of migratory birds. A complete nest survey was not conducted during the 2009 site visit, although no nests were observed at the proposed WTP site or within the proposed pipeline alignments. It is likely that migratory birds commonly nest in different habitat throughout the planning area.

4.6.3.2 Environmental Consequences

The WTP site and proposed water lines for the Proposed Action and Alternatives 2 and 3 are mostly along roadways or within already disturbed areas, but disturbance-adapted species may nest in these areas. Construction activities within the active breeding season may temporarily displace some individuals, but would not adversely affect the overall population of nesting birds in the area. Future development, which would likely occur from the

Proposed Action and Alternatives 2 and 3, would permanently displace some individuals and result in a change in species to those more adapted to human development. The No Action Alternative would have no direct effect on migratory birds.

4.6.3.3 Mitigation

The following mitigation measures are proposed to avoid, minimize, and mitigate the effects on migratory birds under the Proposed Action:

- All vegetation would be removed from the construction right-of-way outside of the breeding season to avoid destroying any potentially active nests.
- If vegetation removal outside of the breeding season is not feasible, preconstruction surveys for active migratory bird nests would be performed and design changes would be implemented, if possible, to avoid nests during the active breeding season (typically from March to August).
- If an active nest is identified within or near the planning area, activities that would directly impact the nest, or that would encroach close enough to cause adult birds to abandon the nest during the breeding season, would be restricted.
- Areas temporarily disturbed by construction would be revegetated as soon as possible after construction with native species similar to the surrounding area.

4.6.4 Large Game

4.6.4.1 Affected Environment

Large game wildlife species, such as white-tailed deer, mule deer, elk, and pronghorn, are economically important species in Colorado. No major large game migration routes identified by the CDOW (CNDIS 2009) exist within the planning area, although the riparian corridor along the South Platte River is a concentration area for white-tailed deer (Figure 7). The developed areas of the City are not included within the mapped white-tailed deer concentration area. No winter concentration areas or severe winter range for large game species was identified within the planning area. White-tailed deer concentration areas are defined as corridors of riparian habitat along river or stream courses that support higher populations of white-tailed deer, serve as travel corridors, and are considered critical habitat for white-tailed deer (CNDIS 2009).

Figure 7. White-tailed Deer Concentration Area

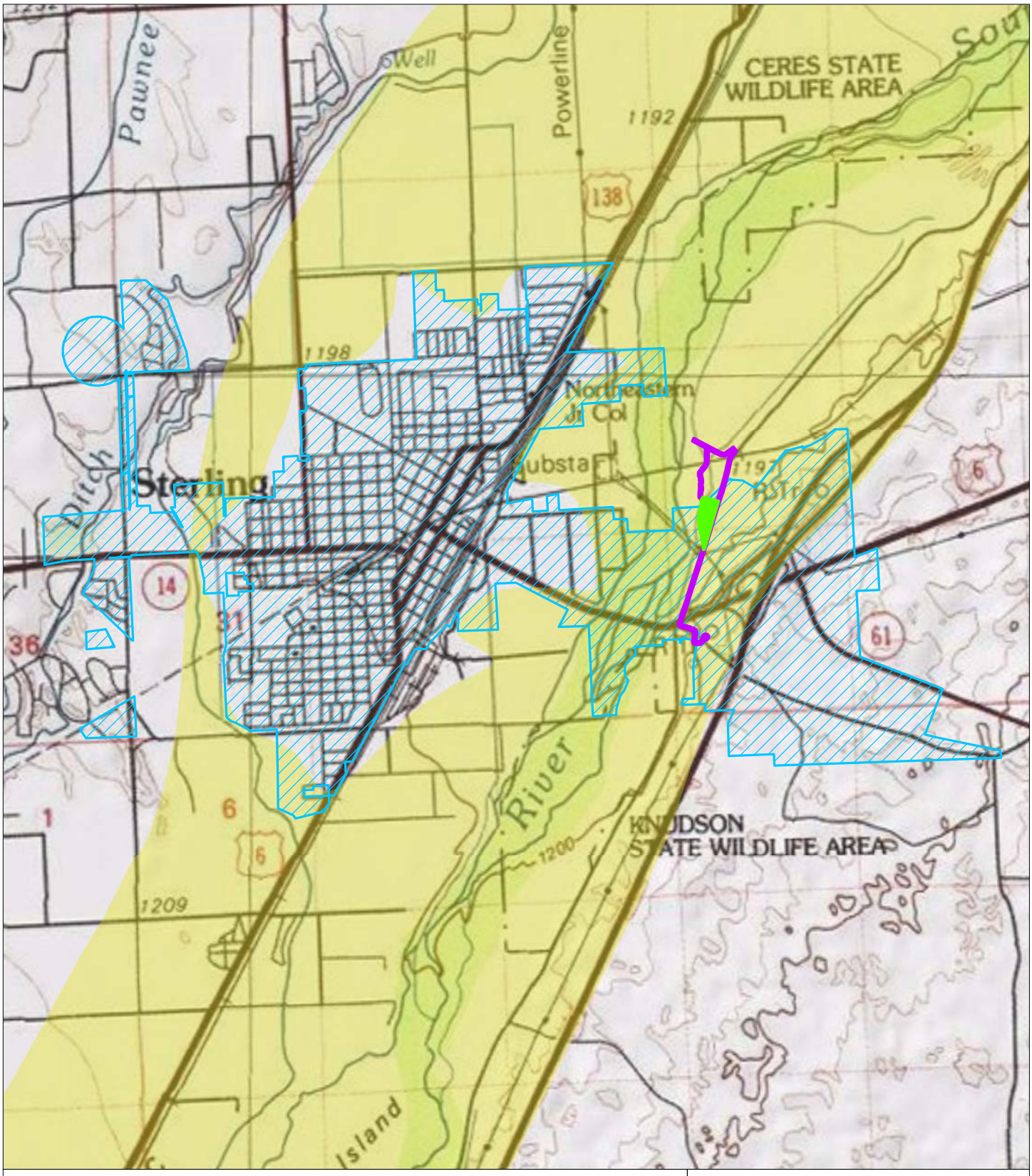

Sterling Water Treatment Plant

- White-tailed Deer Concentration Area
- Pipeline Easement
- Water Treatment Plant Site
- Planning Area

0 2,000 4,000 feet

1 inch = 4,000 feet

N

Figure 7
White-tailed Deer
Concentration Area

Prepared for: Richard P. Arber Associates
File: 4417 - Fig 7 WT Deer.mxd [GS]
May 2009

ERO
ERO Resources Corp.

Portions of this document include intellectual property of ESRI and its licensors and are used herein under license. Copyright © 2008 ESRI and its licensors. All rights reserved.

4.6.4.2 Environmental Consequences

Under the Proposed Action and Alternatives 2 and 3, the proposed WTP site and water lines are located near the South Platte River in the area mapped as white-tailed deer concentration area. Construction of the WTP and pipelines could result in temporary displacement of deer during construction. The No Action Alternative would have no effect on white-tailed deer or other large game species.

4.6.4.3 Mitigation

The following mitigation measures would be implemented to mitigate effects on large game habitat under the Proposed Action:

- Disturbed areas would be revegetated as soon as possible following construction with species similar to the existing landscape.

4.7 Surface Water and Ground Water Quality and Quantity

4.7.1 Affected Environment

The South Platte River is the major water body located in the planning area. The Water Quality Control Division of CDPHE has established water quality standards for this section of the South Platte River (CDPHE 2009a). This segment of the South Platte River is classified for the following uses: Warm Water Aquatic Life Class 2, Class 1 Existing Primary Contact Recreation, Agriculture, and Water Supply. Ambient water quality in this section of the river currently meets most of the established standards, with the exception of selenium, sulfate, sodium, and sodium adsorption ratio (SAR) (CDPHE 2009a). Water quantity in this section of the river and the associated aquifer is heavily influenced by ground water pumping and diversions for agricultural and municipal uses.

4.7.2 Environmental Consequences

The Proposed Action and Alternatives 2 and 3 could result in temporary impacts to water quality from runoff containing sediment or other pollutants flowing into the South Platte River during construction. In addition, the new WTP would produce a waste concentrate stream. This concentrate stream would ultimately be disposed of in deep (7,000 feet) underground injection wells. The design will ensure a confining layer between the discharge location and any potential future drinking water aquifer. The WTP would not discharge to

the South Platte River and, therefore, would have no adverse impacts on surface water quality.

It is estimated that approximately 50 percent of the City's residents use water softeners. In addition, the Sterling Correctional Facility located on the southeast side of the City uses a water softening process. The brine used to regenerate water softener resin contains large concentrations of sodium and chloride, which is discharged to the sanitary sewer, flows through the wastewater treatment plant, and is ultimately discharged to the South Platte River. With the addition of the new WTP under the Proposed Action or Alternatives 2 and 3, it is anticipated that a significant reduction in water softeners would occur, thereby reducing the sodium and chloride mass loading to the South Platte River.

Under the Proposed Action, the NF process would operate at an average recovery of 93.3 percent. Recovery is calculated as produced water over raw water feed. Approximately 20 percent of the raw water would bypass the NF process and be treated with MF. Water treated by NF and MF would be blended into the finished water stream. The overall water loss (volume of water lost over volume of raw water) resulting from consumptive use and deep well injection would be approximately 5.4 percent.

Under the No Action Alternative, current problems with the City's drinking water quality would continue. In addition, there would be no reduction in use of water softeners and associated reduction in sodium and chloride loading to the South Platte River. Under Alternative 2, no reduction in the use of water softeners and associated reduction in sodium and chloride loading to the South Platte River would occur.

4.7.3 Mitigation

The following mitigation measures would be implemented for direct impacts to water quality under the Proposed Action:

- A storm water management plan would be implemented.
- BMPs including installation of silt fencing between construction and waterways would be implemented.
- The use of herbicides and storage of petroleum products, chemicals, toxic substances, or hazardous materials would be avoided near the South Platte River.

- Petroleum products, chemicals, toxic substances, or hazardous materials would be handled properly to avoid ground water contamination.

4.8 Socioeconomic/Environmental Justice Issues

4.8.1 Affected Environment

The City's water system serves a residential population of about 13,900. The median household income of the City in 1999 was $27,337; and the median family income was $39,103, about 60 to 70 percent of the Colorado median income (Census 2000). About 323 families (11.5 percent) and 1,639 individuals (15.2 percent) were below the poverty line in 2000. About 14.2 percent of the population is Hispanic or Latino, 0.7 percent is African American, and 0.8 percent is American Indian (Census 2000).

4.8.2 Environmental Consequences

The Proposed Action and Alternatives 2 and 3 would improve service to existing residents and businesses. Additional growth and development is not the intent of the project. No minority or low-income populations would suffer disproportionately high and/or adverse effects as a result of the proposed project. The Proposed Action, Alternative 2, and Alternative 3 would serve all residents of the City equally and would not unduly burden any particular minority or household type.

4.8.3 Mitigation

No mitigation for socioeconomics or environmental justice is necessary under any alternative.

4.9 Air Quality

4.9.1 Affected Environment

The EPA has established National Ambient Air Quality Standards for six air pollutants—carbon monoxide, ozone, nitrogen dioxide, sulfur dioxide, particulate matter (particulates smaller than 10 microns in diameter (PM_{10}) but larger than 2.5 microns and those smaller than 2.5 microns ($PM_{2.5}$)), and lead—to protect the public from health hazards associated with air pollution. The State of Colorado has established similar standards (CDPHE 2009b). Current air quality within the planning area complies with federal and state health standards and poses little to no risk. The more densely populated urban and residential areas of the City would have poorer air quality than the planning area primarily due to more vehicle

emissions and stationary sources. Concentrations of particulates are higher near unpaved roads, trails, and fallow agricultural fields compared to vegetated areas. Concentrations of EPA-monitored air pollutants in the planning area are below federal and state air quality standards, and all portions of Logan County are attainment areas for all designated pollutants (CDPHE 2009c). An attainment area is any area that meets the national primary or secondary ambient air quality standard for a specific pollutant.

4.9.2 Environmental Consequences

Construction of the Proposed Action, Alternative 2, or Alternative 3 would increase emissions from vehicle exhaust and fugitive dust during construction. These minor increases would be localized and short term. Increased pollutants during construction would not exceed applicable air quality standards; and the Proposed Action or Alternatives 2 and 3 would have negligible impacts on existing air quality during construction. Increased emissions would cease after construction, but levels of fugitive dust may remain slightly elevated until sites are revegetated. Negligible long-term air quality impacts are expected from operation of the WTP. The No Action Alternative would have no adverse effect on air quality.

4.9.3 Mitigation

The following mitigation measures would be implemented to mitigate effects on air quality under the Proposed Action:

- Standard dust control practices, such as watering, would be developed and implemented to minimize particulate and dust emissions from construction work sites, as specified in the fugitive dust control plan.
- The Contractor would ensure construction equipment (especially diesel equipment) meets opacity standards for operating emissions.
- Disturbed areas would be promptly revegetated to minimize fugitive dust.

4.10 Transportation

4.10.1 Affected Environment

Portions of U.S. Highway 6, the Burlington Northern Railroad, and local roads cross the planning area. Interstate 76 is located just east of the planning area. U.S. Highway 6 is a relatively busy road, and provides the main route connecting the City to I-76. No traffic data are available for CR 370, but it provides access to the Riverview Golf Course, a CDOT

Facility, a Colorado Highway Patrol Facility, a rest area, a park, and several businesses and residences. Most residential streets in the planning area are located west of the South Platte River, and are not near the proposed WTP site.

4.10.2 Environmental Consequences

The Proposed Action and Alternatives 2 and 3 would increase traffic volumes on area roads and highways during construction. During construction, temporary traffic delays and detours would be needed where pipelines would require open-cut construction within existing roads. Other roads may experience increased traffic from detours. Most traffic disruption would be temporary and after construction. A slight long-term increase in traffic on CR 370 would result as a result of WTP staff driving to and from work and from deliveries to the WTP.

The Proposed Action and Alternatives 2 and 3 would have an indirect effect on transportation because traffic volumes would increase as development in the planning area increases. Increased volumes would have a localized effect on motorists in the planning area, but those effects would be addressed during development planning and approval by the City.

4.10.3 Mitigation

The following mitigation measure would be implemented to mitigate effects on transportation under the Proposed Action:

- A traffic control plan would be submitted to the City by the Contractor.

4.11 Noise

Noise is measured in decibels (dB) scaled to approximate the hearing capability of the human ear (dBA). Common sound levels are 35 dBA to 45 dBA for a quiet peaceful setting, 60 to 65 dBA for normal city noise, and 85 dBA to 90 dBA for heavy equipment. As a result of the Noise Control Act of 1972, the EPA developed acceptable noise levels under various conditions that would protect public health and welfare with an adequate margin of safety. The EPA identified outdoor day/night average noise levels less than or equal to 55 dBA as sufficient to protect public health and welfare in residential areas and other places where quiet is a basis for use (EPA 1979). Although the EPA guideline of 55 dBA is not an

enforceable regulation, it is a commonly accepted target noise level for environmental noise studies.

4.11.1 Affected Environment

The WTP and pipeline corridors are near residential, industrial, or undeveloped areas, or within highway transportation corridors. Noise levels in much of the planning area are typical of a rural community. The most significant source of existing noise in the planning area is from traffic on U.S. Highway 6 and local roads. Cars and trucks using these roads likely increase the ambient noise level from 45 dBA to about 65 dBA, especially adjacent to the roads.

4.11.2 Environmental Consequences

Under the Proposed Action and Alternatives 2 and 3, direct and indirect effects may include noise from construction equipment and increased traffic noise from roads in the planning area. The noise would be loudest near the point of generation and would decrease with increased distance from the source. Frequently, many of the complaints about construction noise involve standard backup alarms, which are used on heavy equipment as a safety device. Noise from construction equipment can be up to 90 dBA, which would be a moderate noise impact close to the activity (Center for Disease Control 2008). The Proposed Action and Alternatives 2 and 3 would result in an unavoidable temporary increase in noise levels during project construction and would affect existing businesses and residences near the WTP site and pipeline alignments. Increased construction noise levels would cease at the end of construction.

4.11.3 Mitigation

The following mitigation measure would be implemented to mitigate effects on noise under the Proposed Action:

- Local noise ordinances for the City would be followed.
- Construction equipment used by contractors would function as designed and would conform to applicable noise emission standards.
- The Contractor would adhere to project work hour restrictions (8 a.m. to 6 p.m.) within 500 feet of residences, hospitals, schools, churches, and libraries.
- Access to construction areas would be restricted so that the public would not be close to loud equipment.

5.0 Summary of Mitigation

Mitigation measures for the resources potentially affected by the proposed project are summarized in Table 6.

Table 6. Mitigation measures for affected resources.

Resource	Mitigation Measure
Land use/Important Farmland	Existing rights-of-way would be used to the maximum extent practicable for construction of the raw water and finished water pipelines.
Wetlands	Wetland impacts would be avoided and minimized to the extent practicable. Because wetlands associated with the sewage lagoons are likely nonjurisdictional, no compensatory mitigation is proposed. Temporary impacts to wetlands would be restored in place.
Wetlands, Water Quality	Stormwater management plans required for new development would mitigate the adverse effects of increased run off from impervious surfaces.
Wetlands, Water Quality, Wildlife, Visual Aesthetics	Construction access roads, staging areas, and disturbed areas would be reclaimed by restoring existing grade and revegetating the area of disturbance.
Cultural Resources	Mitigation of adverse effects to the three known historic properties may be necessary under current design plans, and the eligibility of the Henderson-Smith ditch is currently unknown and so any potential effects to this resource remain undetermined pending recording and evaluation for NRHP eligibility.
Air Quality, Visual Aesthetics	Water would be applied with standard construction practices to control airborne fugitive dust.
Visual Aesthetics	Baffles on construction lighting fixtures would be installed to direct light onto the construction activity only.
Biological Resources (threatened and endangered species)	Depletions to the South Platte River would be addressed through consultation with the Service.
Biological Resources (wildlife)	BMPs and state and federal guidelines would be followed to minimize short- and long-term effects on wildlife. Escape ramps within open trenches during construction would be provided for wildlife that become trapped in the trench.
Biological Resources (migratory birds)	All vegetation from the construction right-of-way would be removed outside of the breeding season to avoid destroying any potentially active nests. If vegetation removal outside of the breeding season is not feasible, preconstruction surveys for active migratory bird nests would be performed and design changes would be implemented (if practicable) to avoid nests during the active breeding season (typically from March to August). If an active nest is identified within or near the planning area, activities that would directly impact the nest, or that would encroach close enough to cause adult birds to abandon the nest during the breeding season, would be restricted.
Water Quality, Wetlands	BMPs including the installation of silt fence between construction and waterways would be implemented.
Water Quality	The use of herbicides and the storage of petroleum products, chemicals, toxic substances, or hazardous materials would be avoided near Pictou Arroyo and other potential water sources. Petroleum products, chemicals, toxic substances, or hazardous materials would be handled properly to avoid ground water contamination.

Resource	Mitigation Measure
Air Quality, Visual Aesthetics	Standard control practices, such as watering, to minimize particulate and dust emissions from construction work sites, as specified in the fugitive dust control plan, would be implemented.
Air Quality	Construction equipment (especially diesel equipment) would meet opacity standards for operating emissions.

6.0 Public Participation

Throughout the course of the project, there have been and will be multiple opportunities for the residents of Sterling to provide input into the direction of the project. The City has developed an Outreach and Communication Plan as part of the Enforcement Order. This plan includes multiple public meetings. Opportunities for public participation include:

1. Water Conservation Plan – The State of Colorado Water Conservation Act of 2004 (HB 1365) requires entities that supply more than 2,000 acre-feet of retail water annually for domestic, commercial, or industrial use prepare and submit a Water Conservation Plan (WCP) to the Colorado Water Conservation Board (CWCB). A Draft WCP has been produced and made available to the residents of Sterling for public comment. Legal notices were issued on March 24, March 31, April 21, and April 28 of 2009 in the Journal Advocate newspaper. The WCP was made available at City Hall and on the City website. The public comment period for the WCP was 60 days.

2. Public Notification – In accordance with the Enforcement Order, the City must notify its residents of any Primary Drinking Water Standard violations. Notifications must be conducted on a quarterly basis.

3. City Council Meetings – Presentations on the direction and status of the project have been made at City Council meetings. These presentations have taken place on July 10, 2008 and April 22, 2009.

4. Preliminary Engineering Report – A Preliminary Engineering Report (PER) is being developed for the new WTP. The PER will summarize the project and the associated costs. In accordance with CDPHE requirements for the PER, a public meeting with a 30-day notice period will be held to address any public comments on the report.

7.0 References

Center for Disease Control. 2008. General Estimates of Work-Related Noises. Available at: http://www.cdc.gov/niosh/01-104.html.

Collins, S.M. 2009. Deputy, SHPO. Personal communication with Kevin Gilmore, ERO Resources Corporation.

Colorado Department of Public Health and Environment (CDPHE). 2009a. Preliminary Effluent Limitations for the City of Sterling's Proposed Water Treatment Plant. CDPHE Water Quality Control Division.

Colorado Department of Public Health and Environment (CDPHE). 2009b. Ambient Air Quality Standards [14] (Amended 12/15/05, effective 3/2/06).

Colorado Department of Public Health and Environment (CDPHE). 2009c. Attainment/ Maintenance Plans for Colorado Communities. Available at: http://www.cdphe.state.co.us/ap/attainmaintain.html. Last accessed: May 12, 2009.

Colorado Division of Wildlife (CDOW). 2008. Colorado Listing of Endangered, Threatened and Wildlife Species of Special Concern. Available at: http://wildlife.state.co.us/species_cons/list.asp.

Colorado Natural Diversity Information System (CNDIS). 2009. Available at: http://ndis.nrel.colostate.edu. Last accessed: May 18 2009.

Colorado Natural Heritage Program (CNHP). 2009. Colorado Natural Heritage Program environmental review: location and status of rare and/or imperiled species and natural communities known from or likely to occur within a two mile radius of the following sections: Township 8 North, Range 52 West, Sections 27 and 34 in Logan County. May 18.

Cowardin, L.M., V. Carter, F.C. Golet, and E.T. LaRoe. 1979. Classification of wetlands and deepwater habitats of the United States. U.S. Fish and Wildlife Service, Office of Biological Services Program. FWS/OBS-79/31.

U.S. Army Corps of Engineers (Corps). 1987. Corps of Engineers Wetlands Delineation Manual, Technical Report Y-87-1, U.S. Army Engineer Waterways Experiment Station, Vicksburg, MS.

U.S. Army Corps of Engineers and U.S. Environmental Protection Agency (Corps and EPA). 2007. U.S. Army Corps of Engineers Jurisdictional Determination Form Instructional Guidebook. May 30.

U.S. Census Bureau (Census). 2000. Available at: www.census.gov. Last accessed: May 18 2008.

U.S. Department of Agriculture Natural Resource Conservation Service (NRCS). 2009. Map of Important Farmlands of Logan County, Colorado. Available at: http://www.co.nrcs.usda.gov/technical/soil/important-farmlands/prime-farm-lands.html.

U.S. Environmental Protection Agency (EPA). 1979. Protective Noise Levels, Condensed Version of EPA Levels Document. EPA 550/9-79-100 (N096-01 II-A-86).

U.S. Fish and Wildlife Service (Service). 2008. Federally Listed and Proposed, Endangered, Threatened, Experimental, and Candidate Species and Habitat in Colorado by County. Available at: http://www.r6.fws.gov/endspp/CountyLists/COLORADO.htm.

Appendix C

City of Sterling Water Conservation Plan

STERLING
A Colorado Treasure

Water Conservation Plan

March 2009

Submitted by

Arber
Water, Wastewater & Reuse Engineers

Richard P. Arber Associates, Inc.
198 Union Blvd., Ste. 200
Lakewood, Colorado 80228
303-831-4700
www.arber.com

TABLE OF CONTENTS

PAGE

EXECUTIVE SUMMARY 1
Existing Water System 1
Current and Planned Water Conservation Activities 2
Conservation Goals and Benefits 2
Identification and Selection of Conservation Measures and Programs 3
Water Conservation Plan Implementation 6
Benefits and Cost of Conservation Measures and Programs, By Group 7
Monitor, Evaluate and Revise Conservation Activities 7

INTRODUCTION 1

CHAPTER 1 EXISTING WATER SYSTEM 2
1.1 Characteristics of the Existing Water Supply System 2
1.2 Sources of Water 3
1.2.1 Potable System 3
1.3 System Limitations 4
1.3.1 Designated Critical Water Supply Area 5
1.3.2 Unaccounted For and Lost Water 5
1.3.3 Plan for Substantial Improvements 5
1.4 Water Costs and Pricing 6
1.4.1 Water Service Charges 6
1.4.2 Water Tap Fees and Plant Investment Fees 7
1.5 Current Policies and Planning Initiatives 7
1.6 Current Water Conservation Activities 8
1.6.1 Watering Restrictions 8
1.6.2 Tiered Rate Structure 8
1.6.3 Increased Metering 8
1.6.4 Educational Outreach 8

CHAPTER 2 WATER USE AND FORECAST DEMAND 10
2.1 Current Water Use 10
2.1.1 Customer Classes 10
2.1.2 Potable Water Production and Demands 11
2.1.3 Large Customers 12
2.1.4 Indoor and Outdoor Use 12
2.1.5 Seasonality of Water Use 13
2.1.6 Historic Water Use 13
2.2 Forecasting Method 14
2.3 Demand Forecast 14

CHAPTER 3 PROPOSED FACILITIES 16
3.1 Potential Facility Needs 16
3.1.1 Water Treatment Plant 16
3.1.2 Water Supply 16
3.2 Incremental Cost Analysis 17
3.3 Preliminary Capacity Forecast 18

CHAPTER 4 CONSERVATION GOALS 19
4.1 Water Conservation Goals 19
4.2 Goal Development Process 20

CHAPTER 5 CONSERVATION MEASURES AND PROGRAMS 21
5.1 Conservation Measures and Programs 21
5.2 Screening Criteria 22
5.3 Conservation Measures and Programs Selected for Further Analysis 23

CHAPTER 6 SELECTION OF CONSERVATION MEASURES AND PROGRAMS 25
6.1 Combinations of Measures and Programs 25
6.2 Costs and Water Savings of Conservation Options 27
6.3 Benefits and Costs 27
6.4 Evaluation Criteria 27
6.5 Selection of Conservation MEASURES and Programs 27

CHAPTER 7 INTEGRATION OF RESOURCES AND MODIFICATION OF FORECASTS 30
7.1 Demand Forecasts Modifications 30
7.2 Project-Specific Savings and Supply-Capacity Forecasts 31
7.3 Revenue Effects 32

CHAPTER 8 IMPLEMENTATION PLAN 33
8.1 Implementation Schedule 33
8.2 Plan for Public Participation in Implementation 35
8.3 Plan for Monitoring and Evaluation Processes 35
8.4 Plan for Updating the Conservation Plan 35
8.5 Water Conservation Plan Adoption, Completion, and Approval 35

CHAPTER 9 MONITOR, EVALUATE AND REVISE CONSERVATION ACTIVITIES 36
9.1 FUTURE WATER CONSERVATION PLAN ACTIVITIES 36

REFERENCES 37

APPENDIXES

Appendix A Worksheets
Appendix B State Engineers Map
Appendix C Public Participation

LIST OF TABLES

PAGE

Table ES-1: Water Conservation Goals 3
Table ES-2: Water Conservation Measures Evaluated 4
Table ES-3: Estimated Savings 5
Table ES-4: Implementation Schedule for Measures and Programs 6
Table ES-5: Benefits and Costs for Each Group 7
Table 1-1: Types of Service Connections 2
Table 1-2: Water Demands By Customer Class (Year 2008) 3
Table 1-3: Summary of Potable Wells and Water Production 4
Table 1-4: Rate Structure – Minimum Monthly Charge 6
Table 1-5: Rate Structure – Charge per Consumption 6
Table 1-6: Plant Investment Fee Structure 7
Table 2-1: Historic Average Demand 10
Table 2-2: Potable Water Production Summary 12
Table 2-3: Top Water Demands 12
Table 3-3: Incremental Supply Costs 18
Table 4-1: Water Conservation Goals 19
Table 5-1: Water Conservation Measures Evaluated 22
Table 6-1: Summary of Groups 26
Table 6-2: Benefits and Costs for Each Group 27
Table 6-3: Selection Criteria 28
Table 7-1: Estimated Savings 31
Table 8-1: Implementation Schedule for Measures and Programs 34

LIST OF FIGURES

PAGE

FIGURE 1-1 – CITY OF STERLING SERVICE AREA .....Following 3

FIGURE 2-1: DEMANDS BY USE CLASS 11

FIGURE 2-2: OUTDOOR VS. INDOOR USAGE 13

FIGURE 2-3: HISTORIC DEMAND BY USER CLASS 14

FIGURE 2-4: DEMAND PROJECTIONS WITH NO ADDITIONAL CONSERVATION..... 15

FIGURE 7-1: PROJECTED DEMANDS WITH ADDITIONAL FUTURE WATER CONSERVATION MEASURES 30

EXECUTIVE SUMMARY

The State of Colorado Water Conservation Act of 2004 (HB 1365) requires that entities that supply more than 2,000 acre-feet of retail water annually for domestic, commercial or industrial use, prepare and submit a Water Conservation Plan (WCP) to the Colorado Water Conservation Board (CWCB). The City of Sterling developed its latest WCP in 1996 under the 1991 State of Colorado Water Conservation Act (HB 1154). Water conservation measures adopted in accordance with the 1996 are outlined in this plan.

This Water Conservation Plan was developed based on guidance provided by the Water Conservation Plan Development Guidance Document by the Colorado Water Conservation Board. The Plan has been developed to allow for the evolution, exploration and implementation of new ideas as well as improvements upon existing measures and regulations.

This Water Conservation Plan is a general plan of policy and action and does not address specific actions, but rather general categories of actions. Specific actions will be developed and implemented by members of the City of Sterling staff.

Existing Water System

The City of Sterling is located approximately 120 miles northeast of Denver along Highway I-76, and is located adjacent to the South Platte River. Primary water uses in the City of Sterling include residential, commercial, and industrial water use, as well as irrigation. The City water system serves a residential population of approximately 13,900 people, and approximately 4,570 service taps.

The City's water system is currently supplied by existing wells. There are two main well fields serving the City: the East Well Field located east of the City near highway I-76, and the West Well Field located west of the City. The City's wells are typically 60 to 100 feet deep.

The City has a potable water supply well production capacity of approximately 9,795 gallons per minute (gpm) if all wells are in operation. The total decreed well capacity for the potable system is 9,969 gpm. The City of Sterling water system has two pressure zones containing four water storage tanks. The main pressure zone serves the majority of the City with the exception of a small area on the east side of the City, which is served by the second pressure zone. Two ground level tanks are located in the West Well Field and have water storage volumes of 7.5 million gallons (MG) and 2.0 MG. Two elevated tanks are located within the City (North and South Tanks), and both have a water storage volume of 250,000 gallons each.

Current and Planned Water Conservation Activities

The following summarizes the City's current and planned water conservation activities:

- Watering restrictions for residential irrigation, golf course rough, vehicle fleet washing, personal vehicle washing and restaurants serving water have been implemented by the City.
- A tiered rate structure has been implemented by the City.
- Increase in overall water rates has been implemented by the City.
- Increased metering of City facilities and parks has been implemented.
- The City supports an annual water festival in May for fourth through sixth grade age children and families in northeastern Colorado.

The exact quantity of water conserved by the conservation activities currently implemented by the City is unknown. Most of Sterling's existing conservation activities are in the form of regulations and policies that encourage conservation by water users. It is difficult to quantify water savings from behavioral conservation practices in comparison to specific actions that limit water usage.

One estimation of the quantity of water conserved is residential per capita use. According to the 1996 Water Conservation Plan, the residential per capita use for the City of Sterling was 135 gallons per capita per day (gpcd) in 1995. The average residential per capita use for the years 2003 – 2008 was 126 gpcd. This reflects a 7% decrease in residential per capita use from the mid 1990's to the present time.

Conservation Goals and Benefits

Continual population growth and recent droughts in Colorado have made water conservation an essential component of planning for most utilities. The City of Sterling is no exception and the City has been implementing and considering water conservation programs and measures for a number of years. Table ES-1 summarizes the City of Sterling's water conservation goals and the type of savings targeted by each.

Table ES-1: Water Conservation Goals

Use	Goal	Type of Demand Targeted
Per capita residential demand	Savings in residential demands with a focus on irrigation	Average and Peak Day Demand
Per connection non-residential demand	Savings in per connection non-residential demand with a focus on large water users	Average Demand
Total park irrigation demand	Savings in total City irrigation	Average and Peak Day Demand
Unaccounted for water	Decrease the unaccounted for water by increasing metering and targeting potential leaks	Average Demand

Residential irrigation demand and per-connection non-residential demand were targeted in order to lower total water usage and limit required water right acquisitions. Outdoor use accounts for 43% of the overall average demand. Therefore, targeting outdoor use would reduce overall demand, limiting future required water right acquisitions.

The City of Sterling averages approximately 17% unaccounted for water annually. It is estimated that 11% of the demand within the potable system is leaks. By reducing the amount of unaccounted for water, the City will have the ability to determine how much of the demand is truly leaks.

The City has set a goal of between 5% - 10% total reduction of their average demand by 2022. By saving 5% - 10% of the overall demand, the City would be saving between 107 million gallons and 214 million gallons (328 ac-ft - 657 ac-ft) per year by the year 2022. In addition to overall savings, the City has set a goal reduce the projected peak day demand in the year 2022 by 5% to 10%.

Identification and Selection of Conservation Measures and Programs

Numerous water conservation measures and programs were identified based on lists supplied by the Colorado Water Conservation Board. A series of screening criteria were used to identify measures and programs that aligned with the City's goals and resources.

The City has already implemented some water conservation programs, including a tiered rate structure, overall rate increases, watering restrictions, and educational outreach. These programs have decreased the City's water demands. Additional measures and programs were selected for further screening. Table ES-2 summarizes the water conservation measures that were considered as a part of this Water Conservation Plan.

Table ES-2: Water Conservation Measures Evaluated

Water Conservation Measure	Target User	Target Demand
Showerhead giveaway program	Single-family residential	Average Demand
Efficient washing machine rebate program	Single-family residential	Average Demand
Installation of ET [1] monitors and irrigation audit for City parks	Parks	Average and Peak Day Demands
Residential irrigation system controller rebate program	Single-family residential	Average and Peak Day Demands
Xeriscape rebate program	Single-family residential	Average and Peak Day Demands
Voluntary water audit program	All users	Average and Peak Day Demands
Leak detection program	Unaccounted for water	Average Demand
Increased metering coverage	Unaccounted for water	Average Demand
Water conservation educational outreach program	All users	Average and Peak Day Demands
Water-saving landscape demonstration at City Hall	All users	Average and Peak Day Demands
Water rate increase	All users	Average and Peak Day Demands

[1] ET = Evapotranspiration

The measures and programs that were identified were screened based on a number of factors. These factors include:

- The measures and programs had to be within the City's ability to implement.
- The City does not have the resources available to implement any programs with high start up costs.
- Programs and measures that require significant administration efforts were generally excluded.
- Programs and measures requiring significant financial burden on residential users were eliminated from further consideration.
- Programs and measures that require a significant cost to savings ratio when compared to other measures were generally excluded from further consideration.
- Several programs and measures were simply not applicable to the City.

The measures and programs that were selected to be analyzed were combined in appropriate groups to allow for a more integrated assessment of the potential benefits that may be derived from their implementation. The conservation measures and programs that were selected for further analysis are explained below.

Demand Side Measures and Programs

- Increasing the number of water-efficient fixtures by evaluating a showerhead giveaway program.
- Increasing the number of water-efficient appliances by evaluating an efficient washing machine rebate program.
- Efficient irrigation by implementing an irrigation system controller rebate program.
- Efficient irrigation by installing evapotranspiration (ET) monitors on park irrigation systems.
- Landscape efficiency by implementing a xeriscape rebate program.
- Encouragement of water conservation by implementation of a voluntary water audit program.
- Water conservation encouraged by the use of public education.
- The new water treatment plant will trigger a substantial increase in water rates.

Supply Side Measures and Programs

- Implementation of a leak detection and repair program.
- Increasing the total coverage of metered users. This would mainly target the government buildings that are not currently metered.

As a result of implementing selected water conservation measures and programs, the average day and peak day water demand would be reduced. Table ES-3 summarizes the estimated savings by implementing future water conservation measures.

Table ES-3: Estimated Savings

Year	Type of Demand	Without Additional Conservation	With Additional Conservation	% Savings
2012	Total Annual Average	5.0 mgd	4.9 mgd	2.0%
	Potable Annual Average	3.8 mgd	3.8 mgd	0.0%
	Potable Peak Day Demand	9.0 mgd	8.8 mgd	2.2%
2022	Total Annual Average	5.9 mgd	5.4 mgd	8.5%
	Potable Annual Average	4.5 mgd	4.3 mgd	4.4%
	Potable Peak Day Demand	10.6 mgd	9.9 mgd	6.7%
2032	Total Annual Average	6.6 mgd	6.0 mgd	9.1%
	Potable Annual Average	5.2 mgd	4.9 mgd	5.8%
	Potable Peak Day Demand	12.0 mgd	11.2 mgd	6.7%

The estimated savings outlined in Table ES-3 are based on programs and measures that will best serve the City and its residents. Estimated savings were calculated based on available water conservation information. True savings may be more or less; however, these projections have been used by the City for planning purposes.

Water Conservation Plan Implementation

The implementation of the measures and programs will be spread throughout the 20 year planning period of this Water Conservation Plan. Measures and programs will be phased in order to spread out the capital costs and increased administrative efforts required for the projects. Table ES-4 summarizes the implementation schedule for the existing conservation activities and the chosen future measures and programs.

Table ES-4: Implementation Schedule for Measures and Programs

Line	Measure/Program	Required Action	Scheduled Beginning Date	Expected Completion Date
CHOSEN FUTURE MEASURES AND PROGRAMS				
Group 1 (Rebate program)				
1	Showerhead giveaways	Purchase the first 1,000 showerheads. Replenish as necessary.	2010	2019
2	Washing machine rebates	Develop water bill insert to advertise the program.	2010	2019
3	Irrigation controller rebates	Include advertising for this program with program from line 2	2010	2019
Group 2 (Reduction of Irrigation Demand in City Parks)				
4	Installation of ET monitors in City parks	Purchase and install ET monitors	2010	2014
5	Irrigation water audit for City parks	Select a consultant specializing in efficient irrigation techniques	2010	2014
Group 4 (Reduction in Non-Account Water)				
6	Leak detection and repair program	Contract with leak detection specialist	Ongoing	2014
7	Decrease unmetered connections	Inventory all unmetered connections, purchase meters, and install	2010	2011
8	Water accounting	Develop a database for tracking water production and demand	Ongoing	2010
Group 5 (Reduction in Per Capita Residential and Per Connection Non-Residential)				
9	Customer water audits	Select a consultant specializing in residential, commercial, and industrial water audits	2012	2016
10	Education/information dissemination	Include conservation techniques in monthly water bill inserts	Implemented with Group 1	Ongoing
11	Increase water rates	Administrative action	Ongoing	Ongoing
EXISTING CONSERVATION ACIVITIES				
12	Watering restrictions	Odd addresses water Tuesday, Thursday, and Saturday; and even addresses water Wednesday, Friday, and Sunday	2003	Ongoing
13	Watering restrictions	Golf courses using City water cannot water roughs	2003	Ongoing
14	Watering restrictions	Vehicle fleets and vehicles in auto dealerships cannot be washed more than once each week	2003	Ongoing
15	Watering restrictions	Personal vehicles must be washed only on watering days	2003	Ongoing
16	Watering restrictions	Restaurants may serve water only upon request	2003	Ongoing
17	Rate structure	City has implemented a tiered rate structure	2005	Ongoing
18	Rate increases	City has begun to increase water rates	Latest Increase February 1, 2009	Ongoing
19	Educational outreach	City supports an annual water festival for fourth through sixth grade age children and families in northeastern Colorado	Ongoing	Ongoing

The City intends to update the plan, at a minimum, every 7 years and will update the plan when significant changes occur to the system. When updating the plan the City will examine the costs and benefits of the measures and programs that were implemented in the previous plan. The City will also have the opportunity to add additional water saving measures and programs.

Benefits and Cost of Conservation Measures and Programs, By Group

Table ES-5 summarizes each group and outlines the savings and the costs for each.

Table ES-5: Benefits and Costs for Each Group

Group	Water Savings	Total Cost	Implementation Period	Cost/1,000 Gal Saved
Group 1: Rebate program	Annual: 16.4 MG Peak Day: 0.005 mgd	$32,000	10 years	$0.20
Group 2: Reduction in Parks Irrigation	Annual: 72.6 MG Peak Day: 0.1 mgd [(1)]	$34,000	5 years	$0.09
Group 3: Reduction in Residential Irrigation	Annual: 0.51 MG Peak Day: 0.004 mgd	$45,000	10 years	$8.82
Group 4: Reduction in Non-Account Water	Annual: 1.5 MG	$95,000	10 years	$12.67
Group 5: Per capita residential & per connection non-residential	Annual: 24.6 MG Peak Day: 0.1 mgd	$180,000	10 years	$0.73

[(1)] Peak day savings represented is for the potable irrigation only.

Monitor, Evaluate and Revise Conservation Activities

The measures and programs outlined in this plan will be monitored for their water savings and associated costs. This data will be collected annually so that the programs effectiveness can be tracked. Because there will be multiple conservation measures and programs happening at the same time, it may be difficult to track some of the water savings by individual measures or programs. The measures and programs that are relatively easy to track individually (rebates, park irrigation, large water user audits, etc.) will be tracked; however, overall water savings will also be tracked to evaluate the effectiveness of the Water Conservation Plan as a whole. Monitoring and evaluating the plan at frequent intervals will also allow the City to discontinue a measure or program that is found to be ineffective or too costly.

INTRODUCTION

The State of Colorado Water Conservation Act of 2004 (HB 1365) requires that entities that supply more than 2,000 acre-feet of retail water annually for domestic, commercial or industrial use, prepare and submit a water conservation plan to the Colorado Water Conservation Board. Although prompted by HB1365 to develop a formal plan at this time, the City of Sterling has been involved in implementing water conservation measures as a matter of good practice.

This Water Conservation Plan was developed based on guidance provided by the Water Conservation Plan Development Guidance Document by the Colorado Water Conservation Board. The Plan has been developed to allow for the evolution, exploration and implementation of new ideas as well as improvements upon existing measures and regulations.

This Water Conservation Plan is a general plan of policy and action. Some of the measures and programs outlined address specific actions; however, many of the programs are general categories of actions that will be developed and implemented by members of the City of Sterling staff.

CHAPTER 1
EXISTING WATER SYSTEM

This chapter summarizes the service and operational characteristics of City of Sterling water system. Baseline conditions established in this chapter will be used to evaluate the importance, feasibility and value of water conservation in the following sections. This section also helps the City recognize the benefit of managing future water resources using water conservation principles.

1.1 CHARACTERISTICS OF THE EXISTING WATER SUPPLY SYSTEM

This City of Sterling operates under a Council/Manager form of government. The City of Sterling is located within Logan County approximately 120 miles northeast of Denver along Interstate 76 adjacent to the South Platte River. Sterling's City limits encompass 5.38 square miles. Primary water uses in the City of Sterling include residential, commercial, industrial, and government water use, as well as irrigation. The City water system serves a residential population of approximately 13,900 people and 4,626 service taps. Table 1-1 summarizes the types of service connections in the City.

Table 1-1: Types of Service Connections

Type of Service Connection	Number of Connections
Single Family Residential	3,656
Multi-Family Residential	391
Commercial	520
Industrial	13
Government	50
Parks	30
Total	*4,659*

The City of Sterling does not have a centralized water treatment plant. Drinking water is pumped from alluvial wells, chlorinated, and conveyed to the distribution system. The City of Sterling water system has two pressure zones containing four water storage tanks. The main pressure zone serves the majority of the City with the exception of a small area on the east side of the City, which is served by the second pressure zone. Two ground level tanks are located in the West Well Field and have water storage volumes of 7.5 million gallons (MG) and 2.0 MG. Two elevated tanks are located within the City (North and South Tanks), and both have a water storage volume of 250,000 gallons each. The distribution system includes a network of 85 miles of transmission and distribution lines. Pipe diameters in the system range from 6-inch to 24-inch.

Irrigation for parks, cemeteries, sports fields, and golf courses is supplied by a combination of irrigation-only wells and dedicated irrigation connections to the potable water distribution system. The ethanol plant, located in the north east side of town has two dedicated wells. Water for the ethanol plant is treated with a reverse osmosis (RO) process.

Figure 1-1 illustrates the major components of the distribution system including wells, pumps, and water storage tanks. The City's current water demands, broken down by category, are summarized in Table 1-2. The water demands presented in Table 1-2 are based on billing records. A more detailed analysis comparing water production to demand is found in Chapter 2. Worksheet 1-1 (Appendix A) provides additional information about the key characteristics of the system.

Table 1-2: Water Demands By Customer Class (Year 2008)

Customer Class	Annual Usage (MG) [1]	Percent of Total Annual Usage (%)
Single Family Residential	525	35%
Multi-Family Residential	100	7%
Commercial	164	11%
Industrial	223	15%
Government	215	15%
Parks	247	17%
Total	*1,474*	*100%*

[1] MG = million gallons

1.2 SOURCES OF WATER

The City is currently supplied by 30 existing wells. The potable distribution system is served by 15 of the 29 wells. The irrigation-only wells consist of 12 of 29 wells. The ethanol plant is served by two wells. One well is dedicated to providing augmentation water only, and is not used for potable use or irrigation. The City recently has added two more potable wells (i.e., the Scalva Wells), which are not yet part of City's distribution system. The City intends to include these wells upon approval from the CDPHE.

1.2.1 Potable System

There are two main well fields providing potable water for the City: the East Well Field located east of the City near highway I-76 with 12 wells, and the West Well Field located west of the City with 3 wells. The City's wells are typically 60 to 100 feet deep. Water production for each well was supplied by the City in October 2008. Table 1-3 provides information for the City's wells.

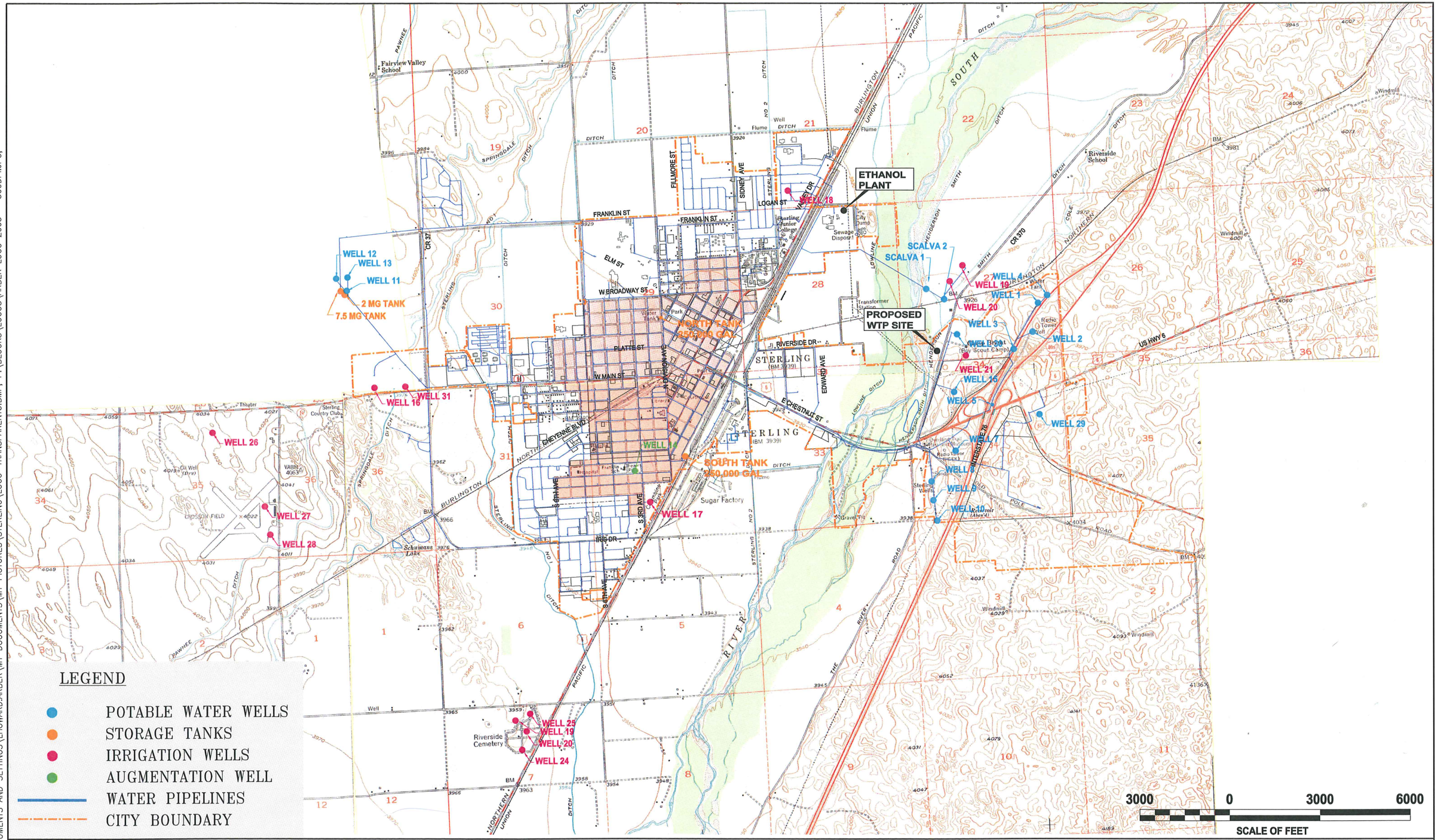

Arber
Water, Wastewater & Reuse Engineers
Richard P. Arber Associates
198 Union Boulevard, Suite 200
Lakewood, Colorado 80228
Website: www.arber.com
Phone: 303.831.4700
Fax: 303.831.0290

STERLING
A Colorado Treasure

FIGURE 1-1
WATER CONSERVATION PLAN
CITY WATER SYSTEM

2/18/09 15:11 LHOWARD R17 P:\STERLING\STERLING02\FIGS\WATER CONS PLAN\FIG1BASE.DWG XREFS: P:\STERLING\STERLING02\FIGS\TM4\TOPO.DWG;
IMAGES: C:\DOCUMENTS AND SETTINGS\LHOWARD.ARBER\MY DOCUMENTS\MY PICTURES\STERLING\LOGO-TRANSPARENT3.BMP; P:\BLOCKS\LOGOS\ARBER LOGO 2005 - 300DPI.JPG;

Table 1-3: Summary of Potable Wells and Water Production

Well Number	Well Field	Typical Water Production (GPM)
1	EAST	300
2	EAST	420
3	EAST	210
4	EAST	650
5	EAST	350
7	EAST	380
8	EAST	470
9	EAST	290
10	EAST	360
15	EAST	750
29	EAST	See note 1
30	EAST	840
Scalva Well 1	EAST	1,250
Scalva Well 2	EAST	1,250
SUBTOTAL	**EAST**	**7,520**
11	WEST	500
12	WEST	1,035
13	WEST	740
SUBTOTAL	**WEST**	**2,275**
	Total Water Production	**9,795** [(2)]

[(1)] Well 29 does not have production data.
[(2)] Well 11, 12 are seasonal wells. Well 13 is an emergency well.

The City has a potable water supply well production capacity of approximately 9,795 gpm if all wells are in operation. This does not include Well No. 29, which supplies a small area to the east of the City. The total decreed well capacity for the potable system is 9,969 gpm.

Wells 11, 12 are used seasonally. Well 13 is an emergency standby well. Due to source water quality issues with respect to uranium and disinfection byproducts (total trihalomethanes), the City is in the process of designing and building a new water treatment plant. The new plant will be located on the east side of the city on the east side of the South Platte River. Once the new plant is placed online, the wells located in the West Well Field will be used as emergency standby wells.

1.3 SYSTEM LIMITATIONS

In order to determine areas of the City's operation that could be improved, the next part of this plan examines the system's limitations. Worksheet 1-2 (Appendix A) provides a summary of basic system conditions and limitations.

1.3.1 Designated Critical Water Supply Area

A map of the designated critical water supply areas on the Colorado Front Range was obtained from the State Engineer's website (Appendix B). The map indicates that the southeastern portion of Logan County is part of a critical water supply. The City of Sterling is located just southwest of the center of the County; therefore, Sterling is not located in a designated critical water supply area.

1.3.2 Unaccounted For and Lost Water

One measure of efficiency for water distribution systems is lost and unaccounted for water. Unaccounted for water is the difference between the water that is produced and the sum of water sold and accounted for losses in the system. Unaccounted water typically consists of system leakage, meter inaccuracies, illegal connections, and uses that are unmetered such as main flushing and fire fighting. A value of under 10% is typically considered acceptable for most water systems according to the American Water Works Association Leak Detection and Water Accountability Committee.

The Water Conservation Plan from 1996 estimated the average percentage of unaccounted for water at 24%. System losses were estimated at approximately 15%. Recent records for total water pumped for the calendar year were compared to the total amount of water billed. According to billing and production data for the years 2006 – 2008, the average unaccounted for water is approximately 17%. It is estimated that system losses are approximately 11%. Most of the City's municipal buildings are unmetered, which accounts for approximately 6%.

1.3.3 Plan for Substantial Improvements

The City is currently in violation of two primary drinking water standards. To ensure long-term compliance, the City is working on planning and preliminary design for a water treatment system. A treatment plant will supply potable water for all of the City's customers. The project is described in greater detail in Section 1.5 – Current Planning Policies and Planning Initiatives and Chapter 3 – Proposed Facilities.

The City plans to construct additional recharge facilities in 2009, 2012 and 2019. The additional recharge sites will supply additional augmentation water to the City to help re-time the Senior Water Rights currently in excess during the irrigation season. The City will also build two storage reservoirs during the planning horizon. These projects are described in greater detail in Chapter 3 – Proposed Facilities.

1.4 WATER COSTS AND PRICING

The water system receives revenue from three major sources to cover the capital and annual operation and maintenance (O&M) costs associated with operating the system; water rates, water tap fees, and plant investment fees. These three revenue sources are discussed in the following paragraphs.

1.4.1 Water Service Charges

One of the City's revenue sources for the water system comes from the sales of water based on actual water consumption for each customer. There are two different rate structures, one for customers within City boundaries and one for customers outside of City boundaries. The minimum monthly rate varies based upon tap size. The City has a tiered rate structure to encourage water conservation. Table 1-4 summarizes the current monthly minimum and Table 1-5 summarizes the current rate structure based on consumption.

Table 1-4: Rate Structure – Minimum Monthly Charge

Meter Size	Monthly Minimum (Inside City Limits)	Monthly Minimum (Outside City Limits)
5/8-inch – 3/4-inch	$8.25	$10.68
1-inch	$9.10	$11.80
1 1/2-inch	$11.18	$14.52
2-inch	$13.66	$17.77
3-inch	$19.46	$25.37
4-inch	$27.75	$36.22
6-inch	$48.48	$63.38
8-inch	$64.83	$84.80
10-inch	$77.92	$110.95

Table 1-5: Rate Structure – Charge per Consumption

Consumption (Thousands of Gallons Per Month)	Charge per Thousand Gallons (Inside City Limits)	Charge Per Thousand Gallons (Outside City Limits)
2-10	$1.44	$1.78
11-20	$1.46	$1.81
21-50	$1.49	$1.85
51-100	$1.53	$1.89
Greater Than 100	$1.63	$1.98

1.4.2 Water Tap Fees and Plant Investment Fees

Another source of revenue for the water utility is derived from tap fees and plant investment fees. A tap fee is a one-time capital charge for a new (or enlarged/increased) connection to the system and is based upon the tap sizes. The current charge for a tap of 1-inch or smaller is a flat rate of $470. Tap fees for taps larger than 1-inch are assessed on a case by case basis. Plant investment fees are based on tap size. Table 1-6 summarizes the plant investment fees based on tap size.

Table 1-6: Plant Investment Fee Structure

Tap Size	Plant Investment Fee (Inside City Limits)	Plant Investment Fee (Outside City Limits)
5/8-inch – 3/4-inch	$1,255	$1,644
1-inch	$2,095	$2,744
1 1/2-inch	$4,190	$5,489
2-inch	$6,700	$8,777
3-inch	$13,400	$17,544
4-inch	$20,940	$27,431
6-inch	$41,880	$54,758
8-inch	$67,000	$87,770
10-inch	$96,325	$126,186

The tap fee and plant investment fee revenues are utilized for repayment of debt service and funding capital projects associated with the expansion of the water system.

1.5 CURRENT POLICIES AND PLANNING INITIATIVES

The City does not have any major policies that affect water use under normal conditions. Currently, there are no restrictions on the number of new taps that may be installed in the City per year.

The City of Sterling is in the process of designing a new water treatment plant (WTP) to address exceedances of primary National Drinking Water Standards for uranium and disinfection by-products (DBP). The City is in the preliminary design phase of the project. The selected treatment processes consists of two separate treatment trains. One of the treatment trains primarily satisfies the need for filtration via microfiltration membranes or other filtration technology, and the other treatment train provides advanced treatment for both primary and secondary drinking water standards with nanofiltration. The costs associated and timeline associated with the WTP project are discussed in Chapter 3 – Proposed Facilities.

The City has several water supply projects planned over the next 20 years. The water supply projects include three recharge sites and additional storage. The projected water supply projects and their associated costs are discussed in greater detail in Chapter 3 – Proposed Facilities.

1.6 CURRENT WATER CONSERVATION ACTIVITIES

The City practices two major water conservation measures; watering restrictions and a tiered rate structure. In addition to the two major water conservation measures, the City has recently installed meters on all parks irrigating with potable water and some government buildings.

1.6.1 Watering Restrictions

Beginning in the year 2003, the City has enforced watering restrictions. The following is a list of the water restrictions implemented by the City of Sterling.

- Residential irrigation is restricted to Tuesday through Sunday.
- Odd numbered addresses may only water on Tuesday, Thursday, and Saturday. Even numbered addresses may only water on Wednesday, Friday, and Sunday.
- Golf courses using City water may not water roughs.
- Vehicle fleets and vehicles in auto dealerships may not be washed more than once each week.
- Personal vehicles may be washed only on watering days.
- Restaurants may only serve water upon request.

1.6.2 Tiered Rate Structure

Beginning in the year 2005, the City has used a tiered rate structure. This rate structure was introduced in Section 1.4.5 – Water Service Charges. The tiered rate structure encourages water conservation by charging higher rates with increasing water usage.

1.6.3 Increased Metering

Prior to 2006, most of the City's municipal buildings and all of the City's parks were unmetered. Beginning in 2006 the City installed meters on all of the park irrigation connections to the potable distribution system. This reduces the amount of unaccounted for water and provides a more thorough water accounting system.

1.6.4 Educational Outreach

The City supports an annual water festival for northeastern Colorado held in May. The purpose of the annual water festival is to educate fourth to sixth grade age children and their families on responsible water practices.

1.6.7 Water Savings From Existing Conservation Activities

The exact quantity of water conserved by the conservation activities currently implemented by the City is unknown. Most of Sterling's existing conservation activities are in the form of regulations and policies that encourage conservation by water users. It is difficult to quantify

water savings from behavioral conservation practices in comparison to specific engineering actions that limit water usage. The metering of water services and tiered water rate structures are recognized to be some of the most effective means to encourage conservation by water users. In addition, irrigation is typically one of the largest demands on a water system. Irrigation watering restrictions are an effective way to reduce usage and dampen peaks.

One estimation of the quantity of water conserved is residential per capita use. According to the 1996 Water Conservation Plan, the residential per capita use for the City of Sterling was 135 gallons per capita per day (gpcd) in 1995. The average residential per capita use for the years 2003 – 2008 was 126 gpcd. This reflects a 7% decrease in residential per capita use from the mid 1990's to the present time.

CHAPTER 2
WATER USE AND FORECAST DEMAND

This section focuses on estimating the future water needs and demands of the City and identifying potential gaps in the existing water supply system. The information in this section was largely taken from projections developed in the planning for the water treatment project.

2.1 CURRENT WATER USE

Current water use in the City's service area can be broken down into a variety of categories. An understanding of the types of use is important to aid in identifying appropriate conservation measures and programs. The following sections characterize water demand by user type.

2.1.1 Customer Classes

The City classifies five main types of demands; residential, commercial, industrial, government, and parks. Residential water sales can be further broken down into two types: single-family and multi-family.

Table 2-1 summarizes the water usage among the classes of demands over the last three years.

Table 2-1: Historic Average Demand

Year	Single-Family Residential (MG)	Multi-Family Residential (MG)	Commercial (MG)	Industrial (MG)	Government (MG)	Parks (MG)	Total (MG)
2006	584	114	176	210	209	247	1,540
2007	527	102	165	198	210	230	1,432
2008	525	100	164	224	215	247	1,475
Average	545	105	168	211	212	242	1,482

(1) Demands presented are for all users.

(1) Data is based on billing and pumping records from the Sterling Finance Department and the Sterling Public Works Department.

According to Table 2-1, demands over the last three years for Sterling have been relatively constant. Figure 2-1 graphically illustrates the division among the various water users in the City.

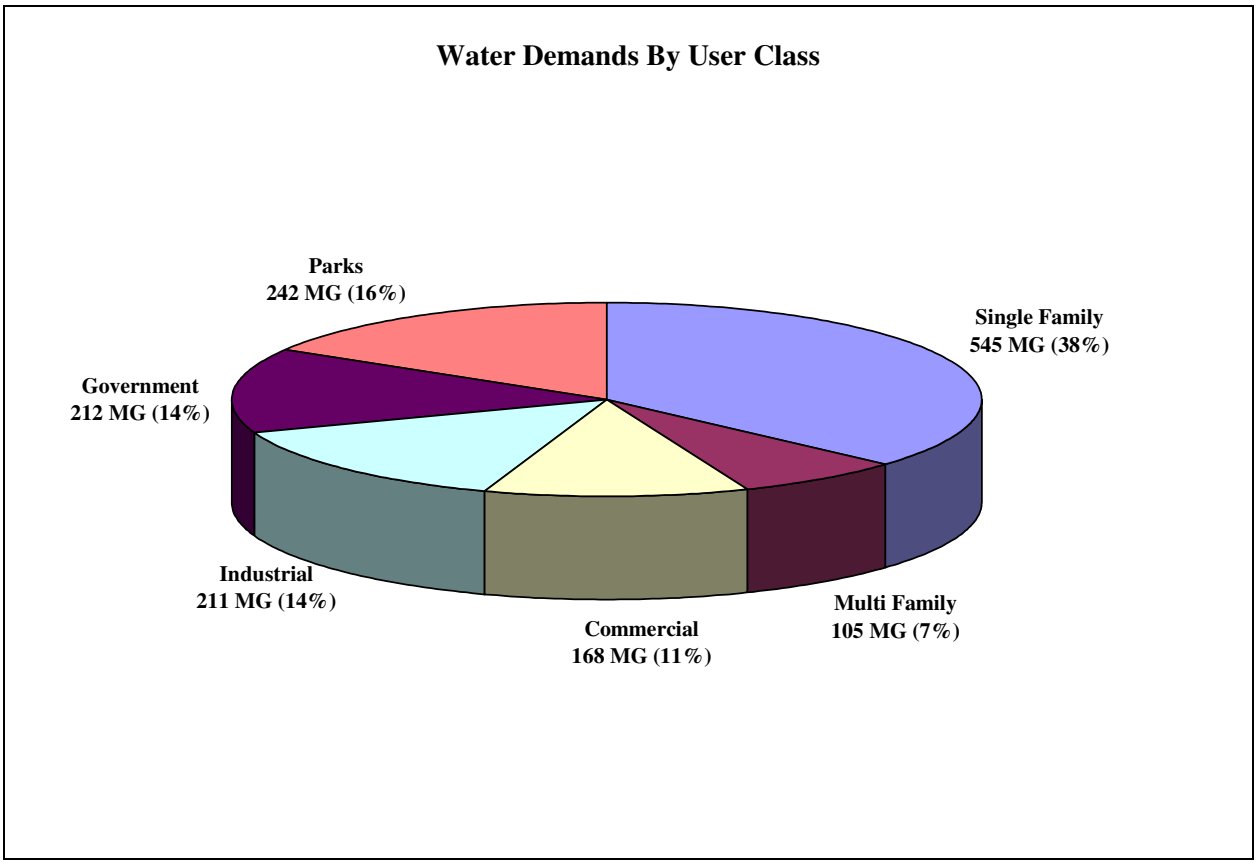

FIGURE 2-1: DEMANDS BY USE CLASS

The largest user class with respect to demand is single family residential, and the second largest user class is parks. Parks represents irrigation water for parks, sports fields, cemeteries, and golf courses. Parks does not include residential irrigation.

2.1.2 Potable Water Production and Demands

The wells that supply the potable water distribution system serve the user classes of residential, commercial, industrial (except for the ethanol plant), and government. Additionally, the wells supplying the potable water distribution system supply a fraction of the parks irrigation water. The potable water demands have been further broken down into peak day demands for planning purposes. The new water treatment plant will be constructed to meet the future peak day demand. Table 2-2 summarizes the current average day and peak day production for the potable water wells.

Table 2-2: Potable Water Production Summary

Demand Type	Potable Water Production (mgd)
Average Day	3.6
Peak Day	8.0
Peak Day to Average Day Peaking Factor	2.22

2.1.3 Large Customers

Based on current billing information, the largest water users were identified. These users are summarized in Table 2-3. Their water use is presented on both a total and percentage basis.

Table 2-3: Top Water Demands

Customer Name	Amount of Water Consumed Annually (MG)	Percentage of Total Water Demand (%)
Sterling Ethanol	222	15%
Colorado Department of Corrections	169	11%
Sterling Living Center	20	1.4%
Colorado Department of Transportation	20	1.4%
Applewood Sterling	9.1	0.6%
Sterling Regional Medical Center	7.5	0.5%
Logan County Justice Center	5.7	0.4%
Devonshire Acres	5.4	0.4%
Logan County Courthouse	3.9	0.3%
Sterling Housing Authority – Macgregor	4.0	0.3%
TOTAL	**467**	**32%**

2.1.4 Indoor and Outdoor Use

The indoor versus outdoor usage for the City is calculated based on the billed usage for the City's parks plus an estimation of residential irrigation. The estimation of residential irrigation is based on Lawn Irrigation Return Flow (LIRF) studies prepared for the City by Bishop-Brogden Associates, Inc. According to the LIRF studies, indoor residential water usage can be estimated by calculating the usage during the months of December to February. Figure 2-2 illustrates the indoor and outdoor usage for the various categories of water users in the City of Sterling.

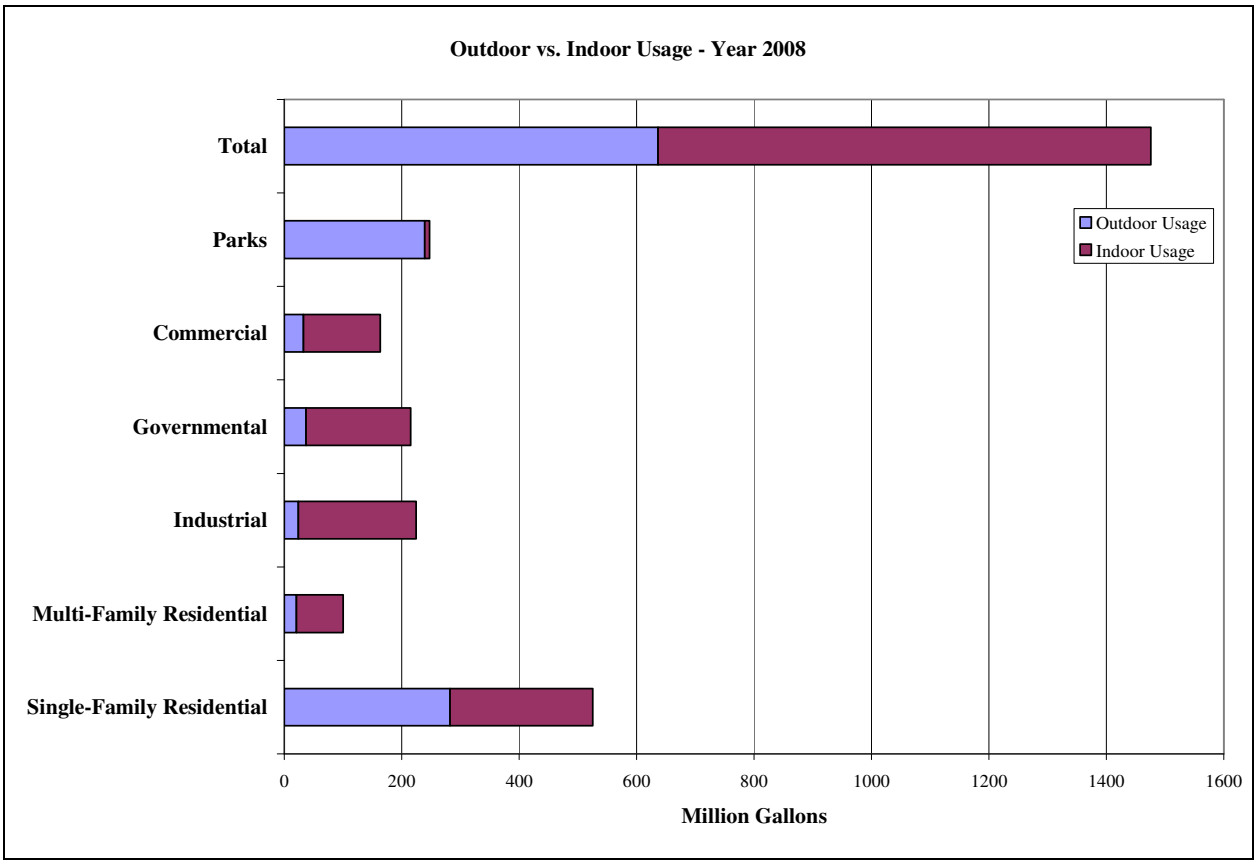

FIGURE 2-2: OUTDOOR VS. INDOOR USAGE

2.1.5 Seasonality of Water Use

Most of the irrigation water use occurs during the summer months when the temperatures are high and the amount of precipitation is limited. The irrigation season in Colorado is generally from May to October. Because of the increase in irrigation, the majority of water use occurs in the summer months. During the winter months, water demand mainly consists of indoor water use.

2.1.6 Historic Water Use

The City of Sterling has experienced little growth over the recent years. Figure 2-3 illustrates the historic water use by customer type for the years 2003 – 2008. The ethanol plant was brought online in 2005, which explains the sudden increase in industrial water usage in 2005. The increase in parks usage in the year 2006 is a result of increased metering. Prior to 2006, a portion of park irrigation was unaccounted for. The trend from 2006 – 2008 for parks irrigation is more representative of the parks use.

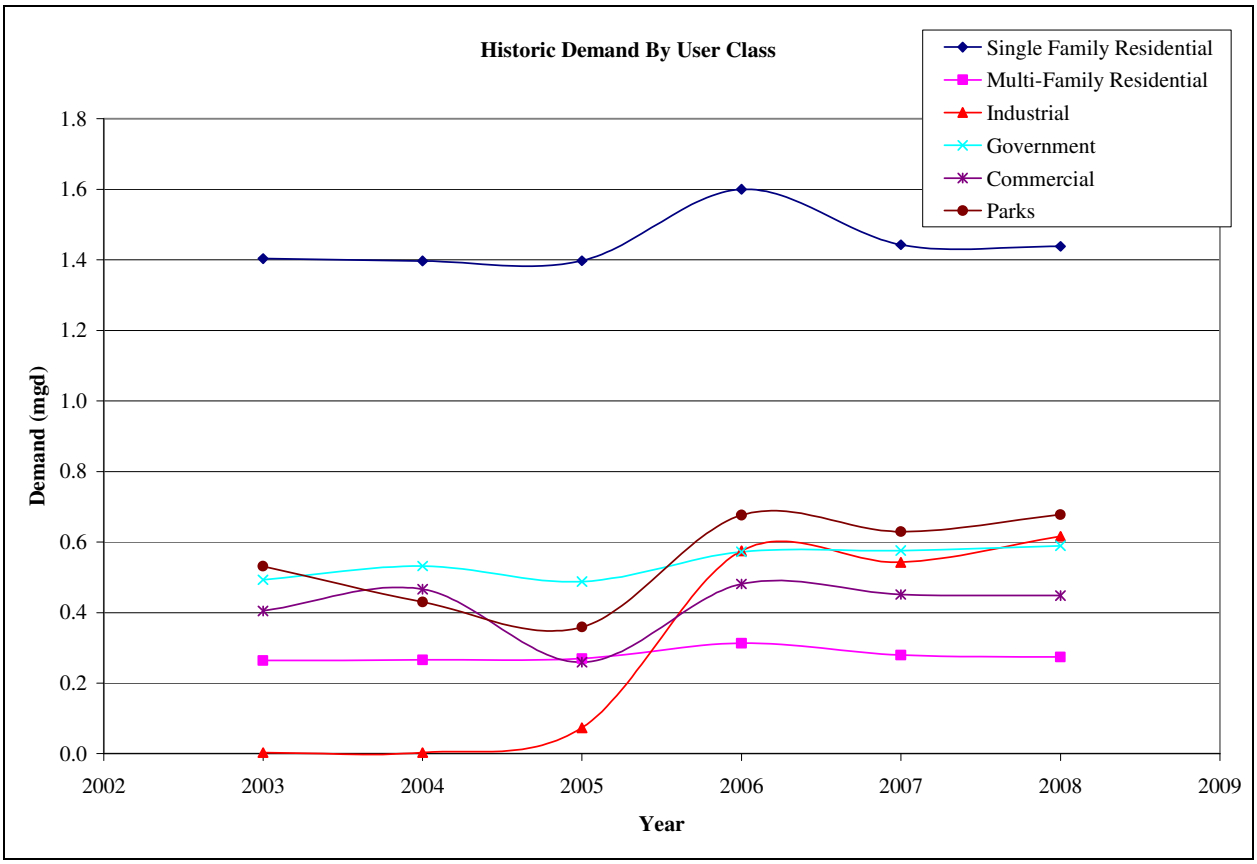

FIGURE 2-3: HISTORIC DEMAND BY USER CLASS

2.2 FORECASTING METHOD

Future water demands with no additional water conservation were estimated using Worksheet 2-1 (Appendix A). The most current data from a variety of sources was collected in order to complete the forecast. Demand was broken down by the different types of water use including residential, non-residential, government, and parks. Also included in the current and future water demands is unaccounted for water. It is estimated that unaccounted water as a percentage of total water use from the distribution system will remain constant throughout the planning horizon.

2.3 DEMAND FORECAST

This demand forecast reflects existing conservation measures within the City. The adjustments from future planned water conservation activities will be addressed later in the plan. Figure 2-4 presents the demand forecast in graphical form.

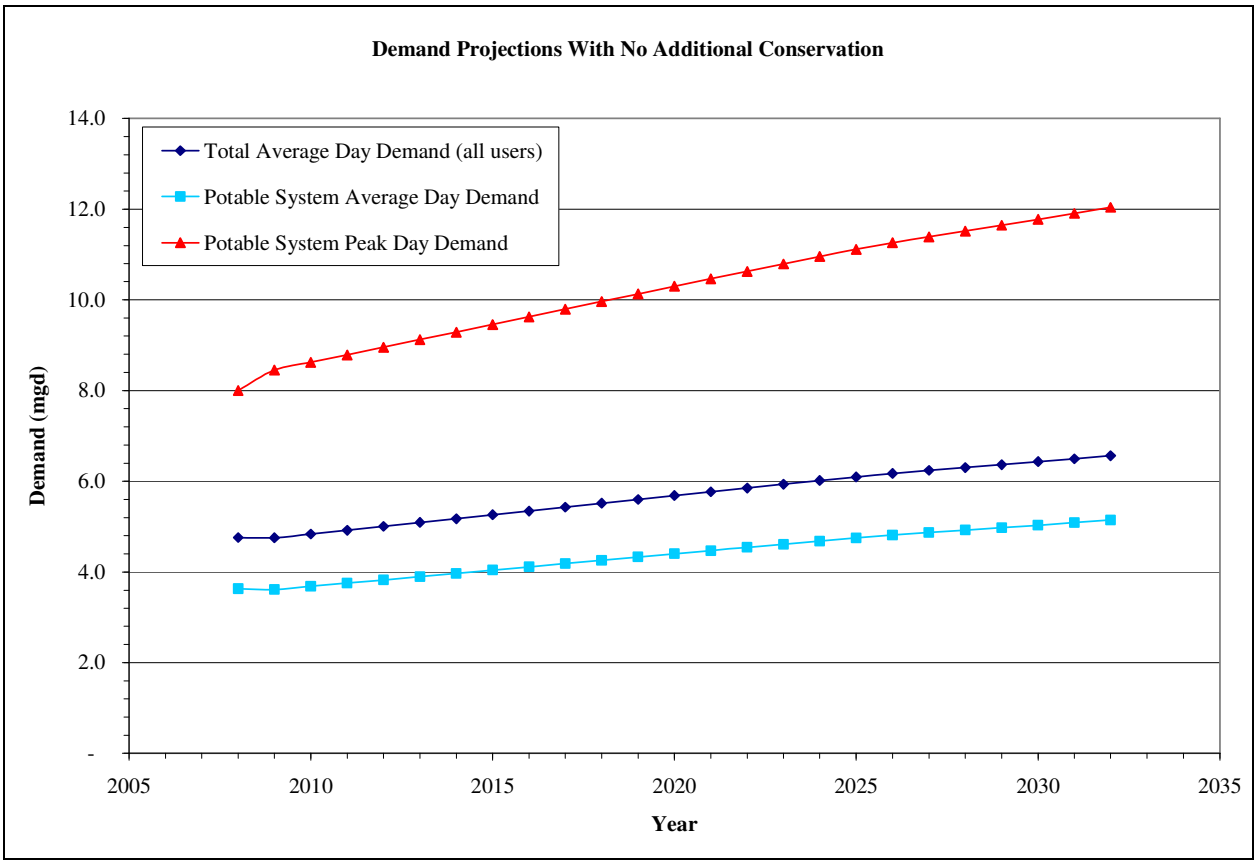

FIGURE 2-4: DEMAND PROJECTIONS WITH NO ADDITIONAL CONSERVATION

CHAPTER 3
PROPOSED FACILITIES

This chapter describes the improvements planned for the system and their associated costs. The planning horizon for the proposed facilities is 20 years.

3.1 POTENTIAL FACILITY NEEDS

The City of Sterling has projected needs for water treatment and water supply facilities over the 20 year planning horizon. The following sections summarize the projected facility needs.

3.1.1 Water Treatment Plant

The City of Sterling is in the process of designing a new water treatment plant (WTP) to address exceedances of primary National Drinking Water Standards for uranium and disinfection by-products (DBP). The proposed facility will process all the potable water for the City of Sterling. A portion of the raw water will be treated using nanofiltration. A blending stream will be treated using microfiltration or other filtration technology. The proposed facility will also include disinfection, storage and pumping systems for the finished water.

The WTP will be constructed to supply the projected peak day demand for the 10 year planning horizon. The plant will be placed online in the year 2012, and the 2022 peak day demand has been estimated at 9.9 mgd. Planning has been done for the new facility with future additional water conservation measures in mind. Room will be built into the facility building in order to accommodate additional expansion of capacity beyond the 10 year planning horizon. Table 3-1 summarizes the major milestones for the WTP project.

Table 3-1: Major Milestones for the Water Treatment Plant Project

Milestone	Date Completed
Submit Preliminary Engineering Report to State	July 1, 2009
Submit Final Design Report to State	November 1, 2009
Submit Final Design Plans and Specifications to State	May 1, 2010
Complete Construction/Implementation of Improvements	December 31, 2011

Cost information for the project is provided in Worksheet 3-1 (Appendix A).

3.1.2 Water Supply

The projected water supply projects, the year they are anticipated to be needed, and the reason for each project are summarized in Table 3-2.

Table 3-2: Projected Water Supply Projects

Project	Year Anticipated	Reason
Construct Recharge Site No. 5	2009	Provide recharge basin for augmentation
Construct Recharge Site No. 2	2012	Provide recharge basin for augmentation
Construct Recharge Site No. 3	2019	Provide recharge basin for augmentation
200 Ac-Ft of Additional Storage	2012	Provide additional storage of augmentation water
200 Ac-Ft of Additional Storage	2030	Provide additional storage of augmentation water

The City of Sterling has begun the initial design process for construction of Recharge Site No. 5. Recharge Site No. 5 has become necessary to provide additional recharge accretions as an augmentation supply regardless of the change in demands and replacement supplies. During the irrigation season, the City has excess credits from Senior Water Rights. Running these excess credits into the new recharge facility, as well as running water into the facility during times of free river will add additional augmentation water to cover the well depletions supplying the City's WTP. The City plans to have Site No. 5 constructed by July 2009. The other two recharge facilities will be built in 2012 and 2019.

In order to construct the Recharge Facilities, there will be approximately $50,000 of improvements required per site. This cost includes the cost to survey the area, scrape the recharge site to the appropriate depth, and build a berm. In addition, the cost of measurement equipment is included in the estimate. Due to the sites for the recharge to be built in 2012 and 2019, the berm height will likely be higher, therefore the sites could cost up to double the construction costs of Site #5. Therefore the total construction costs for all recharge facilities could total $250,000.

The City of Sterling will need to construct two storage reservoirs over the planning horizon, one in 2012 and one in 2030. Each reservoir will be 200 acre-feet. The cost to construct the reservoir will be approximately $3,000 per acre-foot, plus additional measurement equipment and engineering costs. The total cost to construct each reservoir will be approximately $600,000, plus additional measurement equipment and engineering costs.

With existing demands and the construction of the new WTP facilities, the City will need to lease up to 70 acre-feet of water in the month of November or December from 2009 through 2014. These leases are necessary to augment all depletions throughout the planning horizon assuming a worst-case call scenario. The cost of an augmentation supply lease varies, however the City could possibly obtain this amount of water for less than $3,000 each year.

3.2 INCREMENTAL COST ANALYSIS

An incremental cost analysis was conducted for the City to determine the cost each additional gallon of water will cost using Worksheet 3-2 (Appendix A). Table 3-3 summarizes the cost-per-gallon for the new water treatment plant.

Table 3-3: Incremental Supply Costs

Project	Incremental Cost/1,000 Gallons Supplied
New Water Treatment Plant	$1.75/1,000 gallons

The costs summarized in Table 3-3 reflect estimated operation and maintenance costs for the new WTP. Capital costs were not included, as it has been concluded that the capital costs for the new WTP and additional water supply projects do not change with or without water conservation measures.

3.3 PRELIMINARY CAPACITY FORECAST

Worksheet 3-4 (Appendix A) was used to forecast the City's supply for the next 20 years with the assumption that no additional water conservation measures be implemented. The total amount of required supply at year 2032 is 7,356 acre feet per year. The City currently has the required water supply to serve projected growth over the 20 year planning horizon.

CHAPTER 4
CONSERVATION GOALS

The process used to develop reasonable and measurable water conservation goals is documented in Chapter 4. Conservation goals established in this plan aim to provide benefits to both the City and its customers. The existing water conservation goals for the City were examined and used in the development of new goals.

4.1 WATER CONSERVATION GOALS

Continual population growth and recent droughts in Colorado have made water conservation an essential component of planning for most utilities. The City of Sterling is no exception and the City has been implementing and considering water conservation programs and measures for a number of years. The process of preparing this Water Conservation Plan provided an opportunity for the City to focus its current water conservation efforts and to assist in planning for additional efforts.

Table 4-1 summarizes the City of Sterling's water conservation goals and the type of savings targeted by each. The rational behind these goals and the measures implemented to achieve them are discussed in detail in Chapter 5 – Conservation Measures and Programs.

Table 4-1: Water Conservation Goals

Use	Goal	Type of Demand Targeted
Per capita residential demand	Savings in residential demands with a focus on irrigation	Average and Peak Day Demand
Per connection non-residential demand	Savings in per connection non-residential demand with a focus on large water users	Average Demand
Total park irrigation demand	Savings in total City irrigation	Average and Peak Day Demand
Unaccounted for water	Decrease the unaccounted for water by increasing metering and targeting potential leaks	Average Demand

Residential irrigation demand and per-connection non-residential demand were targeted in order to lower total water usage and limit required water right acquisitions.

Outdoor use accounts for 43% of the overall average demand. Therefore, targeting outdoor use would reduce overall demand, limiting future required water right acquisitions. Additionally, outdoor use occurs during irrigation season; therefore, reducing the overall outdoor use would reduce the peak demands within the system.

The City of Sterling averages approximately 17% unaccounted for water annually. It is estimated that 11% of the demand within the potable system is leaks. By reducing the amount of unaccounted for water, the City will have the ability to determine how much of the demand is truly leaks. Accounting for all water demands will be important in order to measure the success of each water conservation measure and program implemented in the future. Additionally, a leak detection program could reduce the overall demand within the potable system and is a good management practice.

The City has set a goal of between 5% - 10% total reduction of their average demand by 2022. Projections with no additional water conservation measures or programs show the City using 2,136 million gallons (6,557 ac-ft) per year in 2022. By saving 5% - 10% of the overall demand, the City would be saving between 107 million gallons and 214 million gallons (328 ac-ft - 657 ac-ft) per year by the year 2022. In addition to overall savings, the City has set a goal reduce the projected peak day demand in the year 2022 by 5% to 10%. Projections with no additional water conservation measures or programs indicate a peak day demand of 10.6 mgd in 2020. A 5% to 10% reduction would result in a peak day demand between 9.5 mgd to 10.1 mgd in 2022.

Water accounting will be useful for tracking the progress of the water conservation effort over time. Adjustments can be made and measures or programs strengthened if the desired progress is not realized.

4.2 GOAL DEVELOPMENT PROCESS

The City of Sterling has implemented water conservation measures in the past. The development of this Water Conservation Plan has provided an opportunity to evaluate the areas which have the greatest potential for savings and the areas which make the most economic sense.

Water conservation goals were presented to the City and discussed in a conference call held on March 18, 2009. The Water Conservation Plan was advertised and made available to the public on the City's website and at City Hall from March 23, 2009 to May 21, 2009. Each of the public comments was documented and responded to. The correspondence with the public is documented in Appendix C.

CHAPTER 5
CONSERVATION MEASURES AND PROGRAMS

In this chapter, possible conservation measures and programs were identified. From the initial list, the measures and programs that aligned with the City's goals and resources were selected for additional consideration in Chapter 6.

5.1 CONSERVATION MEASURES AND PROGRAMS

Conservation measures are specific technologies or practices that directly reduce water use. The customer rather than the water provider must implement demand-side measures. For instance, it is ultimately the customer who replaces an old toilet with a water-efficient model. On the other hand, the water provider implements supply-side measures, such as leak repair. Conservation programs are the activities that a water provider or local government undertakes to encourage or require conservation measures. For example, the utility can offer rebates to customers who replace old toilets. Programs do not themselves save water. For instance, a leak identification program does not save water. It is, of course, a key precursor to leak repair, a measure that does save water.

The City has already implemented some water conservation programs, including a tiered rate structure, overall rate increases, and watering restrictions. These programs have decreased the City's water demands. Additional measures and programs were selected for further screening. Table 5-1 summarizes the water conservation measures that were considered as a part of this Water Conservation Plan. Worksheets 5-1 and 5-2 (Appendix A) provide additional information about the measures and programs that were evaluated.

Table 5-1: Water Conservation Measures Evaluated

Water Conservation Measure	Target User	Target Demand
Showerhead giveaway program	Single-family residential	Average Demand
Efficient washing machine rebate program	Single-family residential	Average Demand
Installation of ET [1] monitors and irrigation audit for City parks	Parks	Average and Peak Day Demands
Residential irrigation system controller rebate program	Single-family residential	Average and Peak Day Demands
Xeriscape rebate program	Single-family residential	Average and Peak Day Demands
Voluntary water audit program	All users	Average and Peak Day Demands
Leak detection program	Unaccounted for water	Average Demand
Increased metering coverage	Unaccounted for water	Average Demand
Water conservation educational outreach program	All users	Average and Peak Day Demands
Water-saving landscape demonstration at City Hall	All users	Average and Peak Day Demands
Water rate increase	All users	Average and Peak Day Demands

[1] ET = Evapotranspiration

5.2 SCREENING CRITERIA

The measures and programs that were identified were screened based on a number of factors.

1) The measures and programs had to be within the City's ability to implement. If the City does not have the required legal rights to implement a measure or program it was automatically excluded.

2) The City does not have the resources available to implement any programs with high start up costs. For this reason, programs and measures with large amounts of money required to start were excluded.

3) Programs and measures that require significant administration efforts were generally excluded.

4) Programs and measures requiring significant financial burden on residential users were eliminated from further consideration. These measures or programs are not anticipated to have a high level of participation.

5) Programs and measures that require a significant cost to savings ratio when compared to other measures were generally excluded from further consideration.

6) Several programs and measures were simply not applicable to the City.

5.3 CONSERVATION MEASURES AND PROGRAMS SELECTED FOR FURTHER ANALYSIS

The conservation measures and programs that were selected for further analysis in the following chapter are explained below. The criteria for why programs or measures were eliminated from further consideration are found in Worksheets 5-1 and 5-2 (Appendix A).

Demand Side Measures and Programs

- Increasing the number of water-efficient fixtures by evaluating a showerhead giveaway program. The program would consist of customers bringing in an old showerhead from their home and getting a replacement showerhead from the City with a flow rate of 1.5 gpm.

- Increasing the number of water-efficient appliances by evaluating an efficient washing machine rebate program. The program would allow customers to show receipts for the purchase of a water efficient washing machine and receive a $100 rebate.

- Efficient irrigation by implementing an irrigation system controller rebate program. This program would allow customers to show receipts for the purchase of an irrigation system controller with rain sensor and receive a $50 rebate.

- Efficient irrigation by installing evapotranspiration (ET) monitors on park irrigation systems will be evaluated. This would be coupled with an overall park irrigation audit conducted by an outside consultant selected by the City.

- Landscape efficiency by implementing a xeriscape rebate program. Customers would be encouraged to install xeriscape landscaping. The City would match 50% the cost of the landscaping up to a maximum of $1,000 per installation.

- Encouragement of water conservation by implementation of a voluntary water audit program. The audits would be performed by outside consultants selected by the City. Any costs would be paid for by the City. Residential and non-residential users would be encouraged to participate.

- Water conservation encouraged by the use of public education. This program would be implemented along with other programs in monthly inserts into water bills.

- The new water treatment plant will trigger a substantial increase in water rates. Water rates have already begun to increase. The latest increase was effective as of February 1, 2009. It is anticipated that additional increases will encourage consumers to conserve.

Supply Side Measures and Programs

- Implementation of a leak detection and repair program will be evaluated. This measure would decrease the amount of non-account water lost in the system. Implementation of this measure is currently ongoing.

- Increasing the total coverage of metered users. This would mainly target the government buildings that are not currently metered.

CHAPTER 6
SELECTION OF CONSERVATION MEASURES AND PROGRAMS

The initial list of measures and programs identified in Chapter 5 for further evaluation were analyzed using cost effectiveness and other criteria in this section. During the evaluation process, five groups of measures and programs were selected for implementation.

6.1 COMBINATIONS OF MEASURES AND PROGRAMS

The measures and programs that were selected to be analyzed in Chapter 5 were combined in appropriate groups to allow for a more integrated assessment of the potential benefits that may be derived from their implementation. This is an important step because measures and programs are often used in conjunction with one another, and by grouping them together it is possible to avoid double-counting of water savings or implementation costs. Table 6-1 describes the groups of measures and programs and includes the anticipated number of installations or uses and the expected lifespan of the group.

Table 6-1: Summary of Groups

Main Category	Specific Measure/Program	Anticipated Number Of Installations Or Uses	Expected Lifespan Of The Group
DEMAND-SIDE MEASURES AND PROGRAMS			
Group 1 (Rebate program)			
Water-efficient fixtures	Showerhead giveaways	2,800 fixtures	10 years
Water-efficient appliances	Washing machine rebates	55 washers	10 years
Landscape efficiency	Irrigation controller rebates	55 controllers	10 years
Group 2 (Reduction of Irrigation Demand in City Parks)			
Landscape efficiency	Install ET monitors on City park irrigation systems	16 ET monitors	5 years
	Irrigation water audit for all City parks	n/a	5 years
Group 3 (Reduction of Irrigation Demand for Residential Users)			
Low water use landscape	Implement a xeriscape rebate program for residential users	45 xeriscape installations	10 years
Group 4 (Reduction in Non-Account Water)			
Distribution system efficiency	Implement a leak detection and repair program	n/a	10 years
	Decrease unmetered connections	n/a	10 years
Group 5 (Reduction in Per Capita Residential and Per Connection Non-Residential)			
Customer water audits	Implement a residential and non-residential voluntary water audit program	400 audits	10 years
Education/information dissemination	Provide water conservation education inserts in monthly water bills	45,000 inserts	10 years
Rate structures and billing systems designed to encourage efficiency	Increase in water rates triggered by new water treatment plant	All	Immediate

6.2 COSTS AND WATER SAVINGS OF CONSERVATION OPTIONS

The costs and water savings for each of the groups of measures and programs were analyzed using Worksheet 6-1 (Appendix A). Worksheet 6-2 (Appendix A) summarizes the cost effectiveness and net benefits of each of the groups.

6.3 BENEFITS AND COSTS

Based on the information in Worksheets 6-1 and 6-2 the amount of water saved and the cost for each group of measure and program could be easily compared. Table 6-2 summarizes each group and outlines the savings and the costs for each.

Table 6-2: Benefits and Costs for Each Group

Group	Water Savings	Total Cost	Implementation Period	Cost/1,000 Gal Saved
Group 1: Rebate program	Annual: 16.4 MG Peak Day: 0.005 mgd	$32,000	10 years	$0.20
Group 2: Reduction in Parks Irrigation	Annual: 72.6 MG Peak Day: 0.1 mgd (1)	$34,000	5 years	$0.09
Group 3: Reduction in Residential Irrigation	Annual: 0.51 MG Peak Day: 0.004 mgd	$45,000	10 years	$8.82
Group 4: Reduction in Non-Account Water	Annual: 1.5 MG	$95,000	10 years	$12.67
Group 5: Per capita residential & per connection non-residential	Annual: 24.6 MG Peak Day: 0.1 mgd	$180,000	10 years	$0.73

(1) Peak day savings represented is for the potable irrigation only.

6.4 EVALUATION CRITERIA

The groups of measures and programs were evaluated based on a number of criteria. While cost was an important factor in determining the measures selected for implementation, other factors were considered as well. The non-monetary factors that were the most important in the evaluation were ease of implementation, staff resources and capabilities, consumer cost impacts, pubic perception, overall effectiveness, and overall water savings.

6.5 SELECTION OF CONSERVATION MEASURES AND PROGRAMS

The measures listed in Table 6-2 were presented to the City. The City reviewed the measures and programs, and a conference call was held on March 18, 2009 to select the measures and programs that would be implemented as part of this plan and to discuss the logistics of their implementation. The participants of the conference call included members of the City's staff along with engineers from Richard P. Arber Associates and Bishop-Brogden Associates, Inc.

Groups 1, 2, 4, and 5 were selected for implementation. The selection of conservation measures and programs is summarized in Worksheet 6-3 (Appendix A). Table 6-3 outlines the general criteria used to select or not select each group.

Table 6-3: Selection Criteria

Group	Selected (yes/no)	Reason
Group 1: Rebate program	Yes	Public perception, ease of implementation
Group 2: Reduction in Parks Irrigation	Yes	Magnitude of annual savings, cost effectiveness
Group 3: Reduction in Residential Irrigation	No	High consumer cost impact, cost ineffectiveness
Group 4: Reduction in Non-Account Water	Yes	Good management practice, improves accounting capability
Group 5: Per capita residential & per connection non-residential	Yes	Public perception, effectiveness across entire user base

The rebate program (Group 1) results in significant savings, and it is the second most cost effective group. In addition, there may be other benefits to the measure. It is anticipated that measure will urge residents who normally would not think about water conservation to begin practicing water conservation measures. The idea of the City making strides to save water is anticipated to have a positive public perception.

The group that results in the largest savings overall is Group 2. An evaluation of park irrigation practices across the city indicates that a significant savings in irrigation is possible (30%) with the installation of ET monitors. This would result in an annual average and peak day savings.

A combination of measures and programs (Group 5) is anticipated to reduce the residential per capita usage and the non-residential per connection usage. The new water plant project will raise water rates significantly. The City has already begun to raise rates, with the last rate increase becoming effective February 1, 2009. As rates increase, users will begin to investigate ways to save water. One method that will be made available to users is voluntary water audits. An educational outreach program will be implemented by inserting water conservation educational material in monthly water bills. The inserts will also advertise the voluntary water audits and the rebate/giveaway program. The public perception of increasing water rates will be more positive as the City takes steps to assist users in reducing water demands.

It is difficult to determine the exact distribution of non-account water in the system. By installing meters on all government buildings, the system losses can be clearly defined, thereby making the water accounting system more transparent. It is estimated that some system losses can be reduced by implementing a leak detection program. Leak detection programs are a good management practice to reduce system losses that may otherwise go unnoticed. This measure may not result in a large savings; however, it will be important to the overall water conservation effort by enhancing the accounting ability of the City. Water accounting will be an important way to evaluate progress.

Xeriscaping is widely accepted as a good management practice to reduce irrigation demands. However, xeriscaping is costly. The high cost of xeriscaping may inhibit many users from participating; therefore, the program was not selected.

CHAPTER 7
INTEGRATION OF RESOURCES AND MODIFICATION OF FORECASTS

Chapter 7 focuses on modifying water demand and supply capacity forecasts to reflect the anticipated effects of conservation. The measures and programs are evaluated to determine whether and how water savings from conservation will allow the City to eliminate, downsize, or postpone new facilities and water rights acquisitions.

7.1 DEMAND FORECASTS MODIFICATIONS

The demand forecasts that were presented in Chapter 2 were modified to reflect changes based on the introduction of the proposed conservation measures that were selected in Chapter 6. These modifications are presented in Worksheet 7-1 (Appendix A). Figure 7-1 illustrates the projected demands with implementation of future water conservation practices. Table 7-1 summarizes the estimated savings by implementing future water conservation measures.

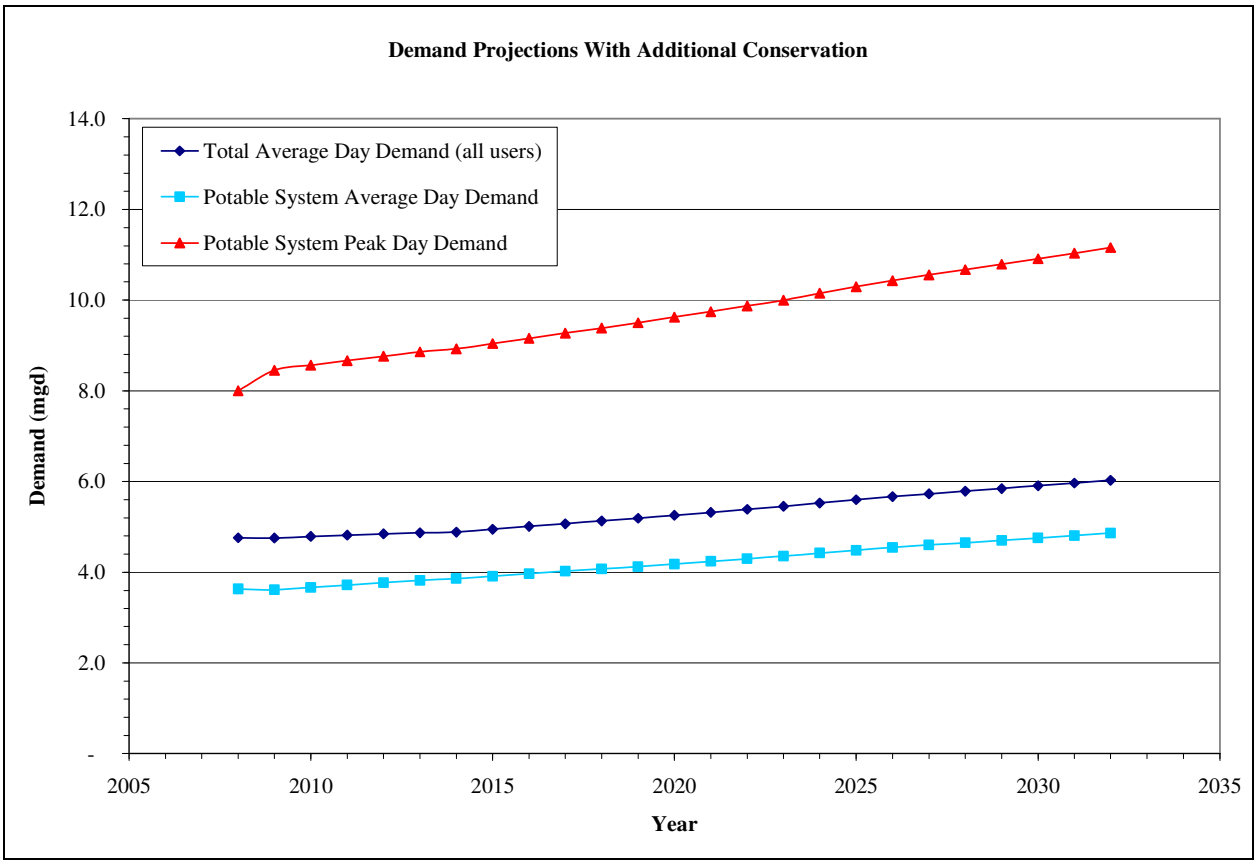

FIGURE 7-1: PROJECTED DEMANDS WITH ADDITIONAL FUTURE WATER CONSERVATION MEASURES

Table 7-1: Estimated Savings

Year	Type of Demand	Without Additional Conservation	With Additional Conservation	% Savings
2012	Total Annual Average	5.0 mgd	4.9 mgd	2.0%
	Potable Annual Average	3.8 mgd	3.8 mgd	0.0%
	Potable Peak Day Demand	9.0 mgd	8.8 mgd	2.2%
2022	Total Annual Average	5.9 mgd	5.4 mgd	8.5%
	Potable Annual Average	4.5 mgd	4.3 mgd	4.4%
	Potable Peak Day Demand	10.6 mgd	9.9 mgd	6.7%
2032	Total Annual Average	6.6 mgd	6.0 mgd	9.1%
	Potable Annual Average	5.2 mgd	4.9 mgd	5.8%
	Potable Peak Day Demand	12.0 mgd	11.2 mgd	6.7%

The estimated savings outlined in Table 7-1 are based on programs and measures that will best serve the City and its residents. Estimated savings were calculated based on available water conservation information. True savings may be more or less; however, these projections have been used by the City for planning purposes.

This Water Conservation Plan provides a good model for the City of Sterling. However, an important part of water conservation is continuing to account for the effectiveness of each program or measure. If a program or measure is not proving to be successful, it should be re-evaluated, and either modified, eliminated, or replaced with a different measure or program in order to meet the goals that have been established.

7.2 PROJECT-SPECIFIC SAVINGS AND SUPPLY-CAPACITY FORECASTS

The forecasts presented in the previous section estimate savings in the future as a result of current and future water conservation practices. The new WTP capacity has been planned with water conservation in mind. The plant will be constructed with capacity to treat water for the 10 year horizon. Space will be left in the building to accommodate additional treatment capacity beyond the 10 year planning horizon. There is no project specific savings associated with future water conservation measures, as the capacity of the plant has already been planned with water conservation accounted for.

The augmentation supplies required to replace all of the City's depletions associated with the well pumping only change slightly when considering additional water conservation measures. With the new WTP and with additional conservation measures in place, the City will need to lease up to 55 acre-feet in November or December of 2009 through 2013 in order to fully augment all depletions. The cost of an augmentation supply lease varies; however, the City could possible obtain this amount of water for less than $2,200 each year. If no additional water conservation measures are implemented, the City will need to lease up to 70 acre-feet in November or December of 2009 through 2014. The cost of an augmentation supply lease varies, however the City could possibly obtain this amount of water for less than $3,000 each year.

7.3 REVENUE EFFECTS

The water conservation programs and measures that are planned have significant costs associated with them. The costs of water conservation coupled with the debt service the City will incur as a result of capital projects will need to be evaluated. A cash flow analysis is difficult at this time, as the estimated costs for capital facilities are at the planning level of detail. As the water treatment project progresses, the City plans to implement a rate structure that takes into account debt payment, operating costs, and the reduced revenue from water not sold due to water conservation. Additionally, rate increases must be implemented such that excessive financial burden on the citizens of Sterling is avoided.

CHAPTER 8
IMPLEMENTATION PLAN

Chapter 8 presents a strategy and timetable for implementing conservation measures and other elements of the Water Conservation Plan. This includes monitoring and evaluating the water conservation activities and revising and updating the Water Conservation Plan.

A conference call was held on March 18, 2009 to select the measures and programs that would be implemented as part of this plan and to discuss the logistics of their implementation. The participants of the conference call included members of the City's staff along with engineers from Richard P. Arber Associates and Bishop-Brogden Associates, Inc.

8.1 IMPLEMENTATION SCHEDULE

The implementation of the measures and programs will be spread throughout the 20 year planning period of this Water Conservation Plan. Measures and programs will be phased in order to spread out the capital costs and increased administrative efforts required for the projects. Table 8-1 summarizes the implementation schedule for the existing conservation activities and the chosen future measures and programs.

Table 8-1: Implementation Schedule for Measures and Programs

Line	Measure/Program	Required Action	Scheduled Beginning Date	Expected Completion Date
CHOSEN FUTURE MEASURES AND PROGRAMS				
Group 1 (Rebate program)				
1	Showerhead giveaways	Purchase the first 1,000 showerheads. Replenish as necessary.	2010	2019
2	Washing machine rebates	Develop water bill insert to advertise the program.	2010	2019
3	Irrigation controller rebates	Include advertising for this program with program from line 2	2010	2019
Group 2 (Reduction of Irrigation Demand in City Parks)				
4	Installation of ET monitors in City parks	Purchase and install ET monitors	2010	2014
5	Irrigation water audit for City parks	Select a consultant specializing in efficient irrigation techniques	2010	2014
Group 4 (Reduction in Non-Account Water)				
6	Leak detection and repair program	Contract with leak detection specialist	Ongoing	2014
7	Decrease unmetered connections	Inventory all unmetered connections, purchase meters, and install	2010	2011
8	Water accounting	Develop a database for tracking water production and demand	Ongoing	2010
Group 5 (Reduction in Per Capita Residential and Per Connection Non-Residential)				
9	Customer water audits	Select a consultant specializing in residential, commercial, and industrial water audits	2012	2016
10	Education/information dissemination	Include conservation techniques in monthly water bill inserts	Implemented with Group 1	Ongoing
11	Increase water rates	Administrative action	Ongoing	Ongoing
EXISTING CONSERVATION ACIVITIES				
12	Watering restrictions	Odd addresses water Tuesday, Thursday, and Saturday; and even addresses water Wednesday, Friday, and Sunday	2003	Ongoing
13	Watering restrictions	Golf courses using City water cannot water roughs	2003	Ongoing
14	Watering restrictions	Vehicle fleets and vehicles in auto dealerships cannot be washed more than once each week	2003	Ongoing
15	Watering restrictions	Personal vehicles must be washed only on watering days	2003	Ongoing
16	Watering restrictions	Restaurants may serve water only upon request	2003	Ongoing
17	Rate structure	City has implemented a tiered rate structure	2005	Ongoing
18	Rate increases	City has begun to increase water rates	Latest Increase February 1, 2009	Ongoing
19	Educational outreach	City supports an annual water festival for fourth through sixth grade age children and families in northeastern Colorado	Ongoing	Ongoing

8.2 PLAN FOR PUBLIC PARTICIPATION IN IMPLEMENTATION

Public participation is important to the implementation of a Water Conservation Plan because it increases the likelihood of success by increasing customer buy-in of the new measures and programs. An advertisement for a 60-day public comment period for the Water Conservation Plan was made in The Journal Advocate. A copy of the Water Conservation Plan was available at City Hall for public review during the public comment period. Additionally, the Water Conservation Plan was made available for download on the City's website. There were **INSERT NUMBER OF COMMENTS HERE** comments received from the public. The correspondence with the public is documented in Appendix C.

8.3 PLAN FOR MONITORING AND EVALUATION PROCESSES

The measures and programs outlined in this plan will be monitored for their water savings and associated costs. This data will be collected annually so that the programs effectiveness can be tracked. Because there will be multiple conservation measures and programs happening at the same time, it may be difficult to track some of the water savings by individual measures or programs. The measures and programs that are relatively easy to track individually (rebates, park irrigation, large water user audits, etc.) will be tracked; however, overall water savings will also be tracked to evaluate the effectiveness of the Water Conservation Plan as a whole. Monitoring and evaluating the plan at frequent intervals will also allow the City to discontinue a measure or program that is found to be ineffective or too costly.

8.4 PLAN FOR UPDATING THE CONSERVATION PLAN

The City intends to update the plan, at a minimum, every 7 years and will update the plan when significant changes occur to the system. When updating the plan the City will examine the costs and benefits of the measures and programs that were implemented in the previous plan. The City will also have the opportunity to add additional water saving measures and programs.

A benefit of updating the plan at a minimum every 7 years will be to examine the actual water use compared to the forecasted water use. The forecasts should be updated and revised.

8.5 WATER CONSERVATION PLAN ADOPTION, COMPLETION, AND APPROVAL

This Water Conservation Plan was developed in conjunction with the City of Sterling staff. Following completion of the 100% draft report, the plan was approved through the following series of steps:

1. Public comment period from March 23, 2009 to May 21, 2009
2. Initial approval by the City of Sterling
3. Colorado Water Conservation Board review and approval
4. Final approval by the City of Sterling

CHAPTER 9
MONITOR, EVALUATE AND REVISE CONSERVATION ACTIVITIES

9.1 FUTURE WATER CONSERVATION PLAN ACTIVITIES

Implementation of the Water Conservation Plan is a long term activity that involves continual evaluation and refinement of the plan. The Water Conservation Plan will begin to be implemented following adoption by the City of Sterling, and will be implemented in general conformance with the key activities identified in this report, including:

- Initiation of water conservation measures and programs according to the schedule identified in Table 8-1.
- Tracking system performance and water savings. Several years of data will likely be required to evaluate the impacts and performance of the measures and programs implemented as a result of this Water Conservation Plan.
- Refining the Water Conservation Plan as a result of increasing water demands, the addition of new water supply sources, and any other changes to the nature of the City over time. Changes to the plan can be adopted at any time.
- Periodic involvement of the public through public meetings, and on-going involvement from the City of Sterling.

REFERENCES

- *City of Aurora, Reuse Water Master Plan Update*, Richard P. Arber Associates (2008).

- *City of Sterling, Lawn Irrigation Return Flow Analysis*, Bishop-Brogden Associates, Inc. (2007).

- *City of Sterling Water Conservation Plan* (1996).

- *Erie Water Conservation Plan*, Camp Dresser McKee, (2008).

- *Smart Water, A Comparative Study of Urban Water Use Efficiency Across the Southwest*, Western Resource Advocates (2003).

- *Treated Water Distribution System Master Plan Update, City of Aurora*, Black and Veatch (2006).

T:\PROJECTS---CLIENTS\STERLING\STRLNG02\1-PREDESIGN\REPORTS\WATER CONSERVATION PLAN\STERLING WCP DRAFT 2 16 09.DOC

APPENDIX A

Worksheet 1-1: Water System Profile

A	SERVICE CHARACTERISTICS	Number		
1	Estimated service population	13,900 residents		
2	Estimated service area (square miles)	5.38 square miles		
3	Miles of mains	85 miles transmission and distribution mains		
4	Number of treatment plants	Zero		
5	Number of separate water systems	One		
6	Interconnections with other systems	None		
B	**ANNUAL WATER SUPPLY**	**2008 Annual volume**	**Number of intake or source points**	**Percent metered**
7	Groundwater	1,733 million gallons	29 Wells	100%
8	Surface water	0	0	N/A
9	Purchases: raw	0	0	N/A
10	Purchases: treated	0	0	N/A
11	Total annual water supply	1,733 million gallons	29 Wells	100%
C	**SERVICE CONNECTIONS**	**2008 Connections**	**2008 Annual Demand**	**Percent metered**
12	Residential, single-family	3,656	525 million gallons	100%
13	Residential, multi-family	391	100 million gallons	100%
14	Industrial	13	224 million gallons	100%
15	Government	49	215 million gallons	No data
16	Commercial	520	164 million gallons	100%
17	Parks	30	247 million gallons	No data
15	Total connections	4,659	1,475 million gallons	No data
D	**WATER DEMAND**	**2008 Annual volume**	**Percent of total**	**Per connection**
16	Residential	625 million gallons	36%	0.15 million gallons
17	Nonresidential	850 million gallons	49%	1.4 million gallons
18	Other (construction)	N/A	N/A	N/A
19	Nonaccount water [1]	259 million gallons	15%	N/A
20	Total system demand (total use)	1,734 million gallons	100%	0.37 million gallons
E	**AVERAGE & PEAK DEMAND (Potable System)**	**2008 Demand**	**Total supply capacity**	**Percent of total capacity**
21	Average-day demand	3.4 MGD	14.4 MGD	24%
22	Maximum-day demand	8.0 MGD	14.4 MGD	55%
23	Maximum-hour demand	No data	No data	No data
F	**PLANNING**	**Prepared a plan**	**Date**	**Filed with state**
24	Capital, facility, or supply plan	N/A	N/A	N/A
25	Drought or emergency plan	N/A	N/A	N/A
26	Water conservation plan	In Progress	In Progress	In Progress

[1] Non-account water is 17% of the potable distribution system.

Worksheet 1-2: Summary of System Conditions

PLANNING QUESTIONS	YES	NO
Is the system in a designated critical water supply area?		X
Does the system experience shortages or supply emergencies?		X
Does the system have substantial unaccounted-for and lost water	X	
Is the system experiencing high rate of population growth?		X
Is the system planning substantial improvements or additions?	X	
Are increases to wastewater system capacity anticipated within the planning horizon?		X

Worksheet 1-3: Summary of Current Conservation Activities

Water conservation measures and programs	*Approximate* annual water savings [if known]	Implemented since (date)	Is continued implementation planned?
Regulations/Ordinances			
Watering restrictions	N/A	2003	Yes
Rate structures and billing systems designed to encourage efficiency			
Tiered rate structure	N/A	2005	Yes
Increased rate structure	N/A	2009	Yes
Distribution system efficiency			
Increased metering of parks	N/A	2006	Yes

Worksheet 2-1: Preliminary Water Demand Forecast

Line	Item	Year (2008)	Year (2012)	Year (2022)	20-Year Forecast (2032)
A	**RESIDENTIAL DEMAND**				
1	Current annual water residential demand (total million gallons)	627			
2	Current population served	13,900			
3	Residential sales per capita (line 1 divided by line 2)	0.0451			
4	Projected population [a]		15,610	19,192	22,212
5	Projected annual residential water demand (line 3 multiplied by line 4)		704	866	1,002
B	**NONRESIDENTIAL DEMAND**				
6	Current annual water nonresidential demand (total million gallons)	165			
7	Current number of service connections [b]	532			
8	Water use per tap equivalent (line 6 divided by line 7)	0.310			
9	Projected number of service connections [c]		582	716	829
10	Projected annual nonresidential water demand (line 8 multiplied by line 9)		181	222	257
C	**GOVERNMENT DEMAND**				
11	Current annual government demand (total million gallons) [d]	215			
12	Projected annual government demand [e]		215	215	215
D	**ETHANOL PLAND DEMAND**				
13	Current ethanol plant demand (total million gallons)	223			
14	Projected ethanol plant demand [f]		223	223	223
E	**POTABLE IRRIGATION DEMAND (EXCLUDING RESIDENTIAL)**				
15	Current potable irrigation demand (total million gallons) [g]	61			
16	Projected potable irrigation demand [h]		64	79	91
F	**IRRIGATION-ONLY WELLS DEMAND**				
17	Current irrigation-only wells demand (total million gallons [i]	198			
18	Projected irrigation-only wells demand [j]		208	255	296
G	**NON-ACCOUNT WATER (WATER NOT SOLD TO CUSTOMERS)**				
19	Current non-account water demand [k]	224			
20	Projected non-account water demand [l]		233	276	313
H	**WATER SYSTEM TOTAL DEMAND**				
21	Current total annual water demand (add lines 1, 6, 11, 13, 15, 17, and 19)	1,713			
22	Projected total annual water demand (add lines 5,10, 12, 14, 16, 18, and 20)		1,827	2,136	2,397
23	Adjustments to forecast (+ or -)		0	0	0
24	Current (line 21) and adjusted total annual water demand forecast (add lines 22 and 23)	1,713	1,827	2,136	2,397
25	Current and projected annual supply capacity	9,830	9,830	9,830	9,830
26	Difference between total use and total supply (+ or -) (subtract line 21 from 25)	8,117	8,003	7,694	7,433
I	**AVERAGE-DAY AND MAXIMUM-DAY DEMAND (POTABLE WATER)**				
27	Current total annual potable water demand (add lines 1, 6, 11, 15, and 19)	1,292			
28	Projected total annual potable water demand (add lines 5, 10, 12, 16, and 20)		1,396	1,658	1,878
29	Current average-day demand (line 27 divided by 365)	3.54			
30	Projected average-day demand (line 28 divided by 365)		3.83	4.54	5.15
31	Current maximum-day demand	7.99			
32	Maximum-day to average-day demand ratio [m]	2.34			
33	Projected maximum-day demand (line 18 multiplied by line 20 for all forecast years)		8.95	10.63	12.04
34	Adjustment to maximum-day demand		0.00	0.00	0.00
35	Current (line 31) and adjusted maximum-day demand forecast (add lines 33 and 34)	7.99	8.95	10.63	12.04
36	Daily supply capacity (potable wells only)	14.4	14.4	14.4	14.4
37	Ratio of maximum-day demand to daily supply capacity (divide line 35 by 36)	0.55	0.62	0.74	0.84

[a] Population projections are based on the Department of Local Affairs (DOLA).
[b] Number of service connections used instead of number of employees.
[c] Growth in number of service connections equivalent to annual population growth.
[d] Government sales represent the Department of Corrections.
[e] Department of Corrections is at full capacity and demand will remain constant.
[f] Ethanol plant at capacity and demands anticipated to be constant into the future.
[g] Potable irrigation includes irrigation of parks, sportsfields, and cemetaries with water from distribution system.
[h] Growth in potable irrigation equivalent to annual population growth.
[i] Irrigation-only wells includes irrigaiton of parks, sportsfields, and cemetaries with wells not connected to distribution system.
[j] Growth in irrigation-only wells equivalent to annual population growth.
[k] 2008 non-account water approximately 24% of demand from the distribution system (residentail, non-residential, government, potable irrigation).
[l] 20% of the demand from the distribution system (residential, non-residential, governement, potable irrigation). Average calculated from 2006 - 2008.
[m] Maximum-day to average-day demand ratio calculated as average from previous three years of production and demand data.

Worksheet 3-1: Anticipated Improvements and Additions

Type(s) of Project(s) [a]	Improvement	New Capacity	Start date	End date
Source of supply	☑			
Water treatment facilities			2008	2012
Treated water storage			2009	
Major transmission lines				

Need(s) for Project(s) (Check all that apply)		Notes
Enhance compliance with regulations	☑	Drinking water standards
Replace older equipment or facilities		_____
Meet average-day demand		_____
Meet maximum-day demand		_____
Meet future growth needs		_____

Funding

Project: Sterling Water Treatment Project
Project Cost: $24,140,000
Financing Cost: $11,390,000 (Assuming 4.0% annual project interest rate, 20 year loan)
Total Capital Cost: $35,530,000

Water purchases

Anticipated future water purchases	None
Cost of water purchases	None

Worksheet 3-2: Cost of Supply-Side Facilities

Line	Item	Facilities for meeting average-day demand	Facilities for meeting maximum-day demand			Water purchases needed to meet demand	Estimate of simple incremental supply cost ($/ gallons)
		Source of supply	Water treatment facilities (average day demand)	Treated water storage	Major transmission lines		
A	**SUPPLY CAPACITY IN MILLION GALLONS PER DAY**						
1	Current installed capacity or water purchases		0.00	10.0			
2	Planned improvements and additions		4.30	0.00			
3	Planned retirements		0.00	0.00			
4	Future installed capacity or purchases (line 1 plus line 2 less line 3)		4.30	10.0			
B	**COST OF PLANNED IMPROVEMENTS AND ADDITIONS**						
5	Approximate total cost of planned improvements and additions identified in line 2 (including financing costs) [a]		See note a				
6	Expected life of new facilities (years) [a]		See note a				
7	Estimated annual capital costs (line 5 divided by line 6) [a]		See note a				
8	Estimated total annual operating costs		$2,750,000				
9	Estimated total annual costs (line 7 plus line 8)		$2,750,000				
10	Per unit cost of new facilities (line 9 divided by (line 2 multiplied by 365 multiplied by 1,000,000))		$0.00175				
11	Simple incremental supply cost (add all entries from line 10)						**$0.00175**

[a] The incremental supply cost used to compare groups of water conservation measures and programs are based on O&M costs. Capital costs are not included in the comparison, as there are no anticipated capital savings as a result of additional future water conservation.

Worksheet 5-1: Conservation Measures Identified in the Planning Process

Measure [a]	Already Implemented?	Evaluated in this Plan (Step 5)?	Evaluated in this Plan (Step 6)?	Comments [b]
DEMAND-SIDE MEASURES				
Water-efficient fixtures and appliances				
Toilets	X			Federal standard of 1.6 gallons per flush enacted in 1994. New homes will automatically have ultra-low flush toilets.
Urinals	X			Federal standards require new construction to have urinals that use 1.0 gallons per flush or less.
Showerheads		X	X	
Faucets	X			Federal standard of 2.2 gallons per minute was enacted in 1994.
Washing Machines		X	X	
Other [specify]				
Landscape efficiency				
Low water use landscapes		X	X	
Drought-resistant vegetation		X	X	
Efficient Irrigation		X	X	
Equipment		X	X	
Scheduling	X			
Develop a plan to turn large users off in drought situations				
Industrial and commercial efficiency				
Water-efficient processes		X	X	
Cooling equipment efficiency				
Other [specify]				
SUPPLY-SIDE MEASURES				
Water reuse systems				
Not applicable to Sterling				Sterling must return flow to South Platte River
Distribution system efficiency				
Leak repair		X	X	
Removal of phreatrophytes				There are no open channel conveyance systems used for supply or distribution.
Other [specify]				
Temporary transfers from agriculture				
Dry year leasing				
Rotational fallowing				
Water salvage				
Other [specify]				
Source optimization				
Conjunctive use				
System integration with other utilities				
Other [specify]				

[a] To meet the requirements of §37-60-126, C.R.S., measures in shaded rows were considered.

[b] This column was used to indicate the chief reason(s) a listed measure is not given further evaluation (Planning Step 6) in this plan.

Worksheet 5-2: Conservation Programs Identified in the Planning Process

Program [a]	Already Implemented?	Evaluated in this Plan (Step 5)?	Evaluated in this Plan (Step 6)?	Comments [b]
DEMAND-SIDE PROGRAMS				
Education/information dissemination				
Public education		X	X	This is done by educating people through water bill inserts providing both general water conservation techniques and advertising voluntary water audits, rebates, and the showerhead giveaway program.
Water-saving demonstrations		X		This is a high cost item for the City both for installation and maintenance. Public education will be conducted via information dissemination through water bill inserts.
School programs				
Informative and understandable water bill				
Water bill inserts		X	X	
Other [specify]				
Technical Assistance				
Customer water use audits		X	X	
Targeted at large users				
Targeted at large landscapes				
Water conservation expert available				
Other [specify]				
Rate structures & billing systems designed to encourage efficiency				
Volume billing	X			
Conservation (tiered) rate structure	X			
Increased (monthly) billing frequency				
Other [specify]				
Regulations/Ordinances				
Addressing fixtures & appliances				
Standards for fixtures and appliances				
Time of sale upgrades				
Other [specify]				
Addressing landscapes				
Turf restrictions				
Landscape design/layout				
Soil preparation				
Irrigation equipment				
Water waste prohibition				
Other (watering restrictions)	X			
Incentives				
Rebates		X	X	
Give-aways		X	X	
Other [specify]				
SUPPLY-SIDE PROGRAMS				
Distribution system efficiency				
Leak identification		X	X	
Meter source water	X			
Meter service connections	X	X	X	
Meter testing and replacement	X			
Improved water accounting	X	X	X	
Analysis of non-account water	X	X	X	
Other [specify]				

[a] To meet the requirements of §37-60-126, C.R.S., measures in shaded rows were considered.
[b] This column was used to indicate the chief reason(s) a listed measure is not given further evaluation (Planning Step 6) in this plan.

Worksheet 6-1: Analysis of Each Conservation Measure or Group of Measures & Programs

Group 1

Describe conservation measure(s):
Installing water efficient fixtures in area households.

Describe program(s), if applicable:
A give away of 3,500 showerheads rated at 1.5 gpm to replace showerheads rated at 2.5 gpm. Provide $100 rebate for the purchase of water efficient clothes washers. Provide $50 rebate for purchase of irrigation controller. Advertised in monthly water bills via inserts.

Typical measure/program water savings: 16.4 million gal per year
Number of planned installations: n/a
Anticipated life span of the savings 10 years

The measure(s)/program(s) is(are) designed to reduce:

- ☐ Average-day demand
- ☐ Maximum-day demand
- X Both average-day and maximum-day demand

Line	Item	Amount	Amount
A	**COST OF THE MEASURE(S)/PROGRAM(S) [a]**	**Per unit [b]**	**Total cost of the measure/program**
1	Materials	$ -	$ -
2	Labor	-	$ -
3	Rebates or other payments	-	$ 28,774
4	Marketing and advertising		$ 3,250
5	Administration		$ -
6	Consulting or contracting		$ -
7	Other		$ -
8	Total program costs for the life of the measure/program (add lines 1 through 7) [c]		$ 32,024
B	**ESTIMATED SAVINGS**		
9	Number of units to be installed [d]		n/a
10	Estimated annual water savings per unit in gallons [e]		na/
11	Total estimated annual savings for the measure/program in gallons (multiply line 9 by line 10)		16,400,000
12	Expected life span for the savings in years		10
13	Total life span estimated saving for the measure/program in gallons (multiply line 11 by line 12)		164,000,000
C	**ANALYSIS OF COST EFFECTIVENESS**		**Amount**
14	Cost of water saved by the measure in $/gallon (line 8 divided by line 13)		$ 0.000195
15	Simple incremental cost of water supply in $/gallon [f]		$ 0.001750
16	Cost comparison in $/gallon (line 15 less line 14)		$ 0.001555
D	**NET BENEFIT OF CONSERVATION**		**Amount**
17	Estimated value of water saved by the measure base on incremental supply cost (line 13 multiplied by line 15)		$ 287,000
18	Net value of water saved by the measure/program (line 17 less line 8)		$ 254,976

[a] This analysis is used to aid the comparison and selection of measure. Planners will estimate actual effects of conservation on planned capital facilities in Section 8. A separate analysis should be performed for each conservation measure or program, but measures/programs were combined if they jointly produce water savings.

[b] Examples of a unit are a toilet, a retrofit kit, and an audit. A unit estimate may not be appropriate for each measure/program in which case total measure/program water savings and costs were used.

[c] All recurring operation and maintenance costs over the life of the measure/program were considered.

[d] Units can be individual product units (such as toilets) or groups of products (such as household retrofits), as long as the analysis is consistent. Left blank if unit values do no apply.

[e] For example, water savings per retrofit. Leave blank if unit values do not apply.

[f] From Worksheet 3-2, line 11.

Worksheet 6-1: Analysis of Each Conservation Measure or Group of Measures & Programs

Group 2

Describe conservation measure(s):
Efficient irrigation in City parks.

Describe program(s), if applicable:
Install ET monitors in all City parks. Select an outside cosultant to conduct an irrigation water audit for the City Parks Department.

Typical measure/program water savings: 72.6 million gal per year
Number of planned installations: 16
Anticipated life span of the savings 5 years

The measure(s)/program(s) is(are) designed to reduce:

- ☐ Average-day demand
- ☐ Maximum-day demand
- X Both average-day and maximum-day demand

Line	Item	Amount	Amount
A	**COST OF THE MEASURE(S)/PROGRAM(S) [a]**	**Per unit [b]**	**Total cost of the measure/program**
1	Materials		$ 16,000
2	Labor		$ 4,480
3	Rebates or other payments	-	$ -
4	Marketing and advertising		$ -
5	Administration		$ -
6	Consulting or contracting		$ 12,800
7	Other		$ -
8	Total program costs for the life of the measure/program (add lines 1 through 7) [c]		$ 33,280
B	**ESTIMATED SAVINGS**		
9	Number of units to be installed [d]		16
10	Estimated annual water savings per unit in gallons [e]		0
11	Total estimated annual savings for the measure/program in gallons (multiply line 9 by line 10)		72,600,000
12	Expected life span for the savings in years		5
13	Total life span estimated saving for the measure/program in gallons (multiply line 11 by line 12)		363,000,000
C	**ANALYSIS OF COST EFFECTIVENESS**		**Amount**
14	Cost of water saved by the measure in $/gallon (line 8 divided by line 13)		$ 0.000092
15	Simple incremental cost of water supply in $/gallon [f]		$ 0.001149
16	Cost comparison in $/gallon (line 15 less line 14)		$ 0.001058
D	**NET BENEFIT OF CONSERVATION**		**Amount**
17	Estimated value of water saved by the measure base on incremental supply cost (line 13 multiplied by line 15)		$ 417,232
18	Net value of water saved by the measure/program (line 17 less line 8)		$ 383,952

[a] This analysis is used to aid the comparison and selection of measure. Planners will estimate actual effects of conservation on planned capital facilities in Section 8. A separate analysis should be performed for each conservation measure or program, but measures/programs were combined if they jointly produce water savings.

[b] Examples of a unit are a toilet, a retrofit kit, and an audit. A unit estimate may not be appropriate for each measure/program in which case total measure/program water savings and costs were used.

[c] All recurring operation and maintenance costs over the life of the measure/program were considered.

[d] Units can be individual product units (such as toilets) or groups of products (such as household retrofits), as long as the analysis is consistent. Left blank if unit values do no apply.

[e] For example, water savings per retrofit. Leave blank if unit values do not apply.

[f] From Worksheet 3-2, line 11. The cost indicated here is a weighted cost between potable water and irrigation water. It is assumed that 25% of the savings will be potable and 75% of the savings will be irrigation only.

Worksheet 6-1: Analysis of Each Conservation Measure or Group of Measures & Programs

Group 3

Describe conservation measure(s):
Low water-use landscapes at single family residences.

Describe program(s), if applicable:
Implement rebate system for residential xeriscaping. City will provide 50% match up to $1,000 for cost of xeriscaping a portion of residential turf. Advertise with inserts in monthly bills. Advertisement would also include miscellaneous water saving techniques around the household.

Typical measure/program water savings: 0.51 million gal per year
Number of planned installations: 46
Anticipated life span of the savings 10 years

The measure(s)/program(s) is(are) designed to reduce:

- ☐ Average-day demand
- ☐ Maximum-day demand
- X Both average-day and maximum-day demand

Line	Item	Amount	Amount
A	**COST OF THE MEASURE(S)/PROGRAM(S) [a]**	**Per unit [b]**	**Total cost of the measure/program**
1	Materials	$ -	$ -
2	Labor		$ -
3	Rebates or other payments		$ 45,000
4	Marketing and advertising		$ -
5	Administration		$ -
6	Consulting or contracting		$ -
7	Other		$ -
8	Total program costs for the life of the measure/program (add lines 1 through 7) [c]		$ 45,000
B	**ESTIMATED SAVINGS**		
9	Number of units to be installed [d]		46
10	Estimated annual water savings per unit in gallons [e]		0
11	Total estimated annual savings for the measure/program in gallons (multiply line 9 by line 10)		510,000
12	Expected life span for the savings in years		10
13	Total life span estimated saving for the measure/program in gallons (multiply line 11 by line 12)		5,100,000
C	**ANALYSIS OF COST EFFECTIVENESS**		**Amount**
14	Cost of water saved by the measure in $/gallon (line 8 divided by line 13)		$ 0.008824
15	Simple incremental cost of water supply in $/gallon [f]		$ 0.001750
16	Cost comparison in $/gallon (line 15 less line 14)		$ (0.007074)
D	**NET BENEFIT OF CONSERVATION**		**Amount**
17	Estimated value of water saved by the measure base on incremental supply cost (line 13 multiplied by line 15)		$ 8,925
18	Net value of water saved by the measure/program (line 17 less line 8)		$ (36,075)

[a] This analysis is used to aid the comparison and selection of measure. Planners will estimate actual effects of conservation on planned capital facilities in Section 8. A separate analysis should be performed for each conservation measure or program, but measures/programs were combined if they jointly produce water savings.

[b] Examples of a unit are a toilet, a retrofit kit, and an audit. A unit estimate may not be appropriate for each measure/program in which case total measure/program water savings and costs were used.

[c] All recurring operation and maintenance costs over the life of the measure/program were considered.

[d] Units can be individual product units (such as toilets) or groups of products (such as household retrofits), as long as the analysis is consistent. Left blank if unit values do no apply.

[e] For example, water savings per retrofit. Leave blank if unit values do not apply.

[f] From Worksheet 3-2, line 11.

Worksheet 6-1: Analysis of Each Conservation Measure or Group of Measures & Programs

Group 4

Describe conservation measure(s):
Leak detection, increase metering coverage, and water accounting.

Describe program(s), if applicable:
Implement a leak detection program. Complete installation of meters on all government building connections.
Implement a water accounting system to track progress of reducing non-account water and all other conservation measures.

Typical measure/program water savings: 1.5 million gal. per year
Number of planned installations: n/a
Anticipated life span of the savings 10 years

The measure(s)/program(s) is(are) designed to reduce:

- X Average-day demand
- ☐ Maximum-day demand
- ☐ Both average-day and maximum-day demand

Line	Item	Amount	Amount
A	**COST OF THE MEASURE(S)/PROGRAM(S) [a]**	**Per unit [b]**	**Total cost of the measure/program**
1	Materials	-	$ 52,000
2	Labor	-	$ 5,600
3	Rebates or other payments	-	$ -
4	Marketing and advertising		$ -
5	Administration		$ 26,000
6	Consulting or contracting		$ 11,200
7	Other	-	$ -
8	Total program costs for the life of the measure/program (add lines 1 through 7) [c]		$ 94,800
B	**ESTIMATED SAVINGS**		
9	Number of units to be installed [d]		n/a
10	Estimated annual water savings per unit in gallons [e]		n/a
11	Total estimated annual savings for the measure/program in gallons (multiply line 9 by line 10)		1,500,000
12	Expected life span for the savings in years		10
13	Total life span estimated saving for the measure/program in gallons (multiply line 11 by line 12)		15,000,000
C	**ANALYSIS OF COST EFFECTIVENESS**		**Amount**
14	Cost of water saved by the measure in $/gallon (line 8 divided by line 13)		$ 0.006320
15	Simple incremental cost of water supply in $/gallon [f]		$ 0.001750
16	Cost comparison in $/gallon (line 15 less line 14)		$ (0.004570)
D	**NET BENEFIT OF CONSERVATION**		**Amount**
17	Estimated value of water saved by the measure base on incremental supply cost (line 13 multiplied by line 15)		$ 26,250
18	Net value of water saved by the measure/program (line 17 less line 8)		$ (68,550)

[a] This analysis is used to aid the comparison and selection of measure. Planners will estimate actual effects of conservation on planned capital facilities in Section 8. A separate analysis should be performed for each conservation measure or program, but measures/programs were combined if they jointly produce water savings.

[b] Examples of a unit are a toilet, a retrofit kit, and an audit. A unit estimate may not be appropriate for each measure/program in which case total measure/program water savings and costs were used.

[c] All recurring operation and maintenance costs over the life of the measure/program were considered.

[d] Units can be individual product units (such as toilets) or groups of products (such as household retrofits), as long as the analysis is consistent. Left blank if unit values do no apply.

[e] For example, water savings per retrofit. Leave blank if unit values do not apply.

[f] From Worksheet 3-2, line 11.

Worksheet 6-1: Analysis of Each Conservation Measure or Group of Measures & Programs

Group 5

Describe conservation measure(s):
Water audit for residential, commercial, industrial, and government users. Rate increase.

Describe program(s), if applicable:
Implement a voluntary water audit program. Information will be made available on the website and in billing inserts.
Increase water rates as a result of the Sterling Water Treatment System Project. Continue to use tiered rate structure.

Typical measure/program water savings: 24.6 million gal. per year
Number of planned installations: n/a
Anticipated life span of the savings 10 years

The measure(s)/program(s) is(are) designed to reduce:

- ☐ Average-day demand
- ☐ Maximum-day demand
- X Both average-day and maximum-day demand

Line	Item	Amount	Amount
A	**COST OF THE MEASURE(S)/PROGRAM(S) [a]**	**Per unit [b]**	**Total cost of the measure/program**
1	Materials	-	$ -
2	Labor	-	$ -
3	Rebates or other payments	-	$ -
4	Marketing and advertising		$ -
5	Administration		$ 20,000
6	Consulting or contracting		$ 160,000
7	Other	-	$ -
8	Total program costs for the life of the measure/program (add lines 1 through 7) [c]		$ 180,000
B	**ESTIMATED SAVINGS**		
9	Number of units to be installed [d]		n/a
10	Estimated annual water savings per unit in gallons [e]		n/a
11	Total estimated annual savings for the measure/program in gallons (multiply line 9 by line 10)		24,600,000
12	Expected life span for the savings in years		10
13	Total life span estimated saving for the measure/program in gallons (multiply line 11 by line 12)		246,000,000
C	**ANALYSIS OF COST EFFECTIVENESS**		**Amount**
14	Cost of water saved by the measure in $/gallon (line 8 divided by line 13)		$ 0.000732
15	Simple incremental cost of water supply in $/gallon [f]		$ 0.001750
16	Cost comparison in $/gallon (line 15 less line 14)		$ 0.001018
D	**NET BENEFIT OF CONSERVATION**		**Amount**
17	Estimated value of water saved by the measure base on incremental supply cost (line 13 multiplied by line 15)		$ 430,500
18	Net value of water saved by the measure/program (line 17 less line 8)		$ 250,500

[a] This analysis is used to aid the comparison and selection of measure. Planners will estimate actual effects of conservation on planned capital facilities in Section 8. A separate analysis should be performed for each conservation measure or program, but measures/programs were combined if they jointly produce water savings.

[b] Examples of a unit are a toilet, a retrofit kit, and an audit. A unit estimate may not be appropriate for each measure/program in which case total measure/program water savings and costs were used.

[c] All recurring operation and maintenance costs over the life of the measure/program were considered.

[d] Units can be individual product units (such as toilets) or groups of products (such as household retrofits), as long as the analysis is consistent. Left blank if unit values do no apply.

[e] For example, water savings per retrofit. Leave blank if unit values do not apply.

[f] From Worksheet 3-2, line 11.

Worksheet 6-2: Comparison of Benefits and Cost of the Conservation Measures and Programs

Line	Conservation measure/program [a]	Total cost for the measure/ program [b]	Anticipated annual water savings in gallons [c]	Cost of water saved by the measure ($/gallon) [d]	Net benefit of implementing the measure/ program [e]
1	Miscellaneous rebates	$ 32,024	16,400,000	$ 0.000195	$ 254,976
2	ET monitors and parks audit	$ 33,280	72,600,000	$ 0.000092	$ 383,952
3	Xeriscape rebates	$ 45,000	510,000	$ 0.008824	$ (36,075)
4	Non-account reduction program	$ 94,800	1,500,000	$ 0.006320	$ (68,550)
5	Consumer water audits & rate structure	$ 180,000	24,600,000	$ 0.000732	$ 250,500

[a] Combined measure and programs that produce joint conservation savings were treated as one
[b] From Worksheet 6-1, line 8.
[c] From Worksheet 6-1, line 11.
[d] From Worksheet 6-1, line 14.
[e] From Worksheet 6-1, line 18. Note: This estimate of net benefit does not consider societal benefits and

Worksheet 6-3: Selection of Conservation Measures/Programs and Estimate of Water Savings

Line	Measure/Program	Selected	Primary criteria for selecting or rejecting the conservation measure/program for implementation	Estimated reduction in demand for selected measures/programs (gallons per day) [a]	
				Average-day demand	Maximum-day demand
1	Rebate program	x	Ease of implementation and public perception	45,000	5,000
2	ET monitors and parks audit	x	Magnitude of savings and cost effectiveness	199,000	128,000
3	Xeriscape rebates		High consumer cost and cost ineffectiveness	1,400	4,000
4	Non-account reduction program	x	Good management practice, improves accounting capability	4,000	
5	Consumer water audits & rate structure	x	Public perception, water savings across all user categories	67,000	96,000
Total				316,400	233,000

[a] Based on Worksheet 6-1, line 11. Planners will need to convert estimates of annual water savings to estimates of reductions in average-day and maximum-day demand for each measure or group of measures/programs.

Worksheet 7-1: Modified Demand Forecast (Entire System)

Line	Item	Year (2008)	Year (2012)	Year (2022)	20-Year Forecast (2032)
1	Average-day demand with existing conservation [a]	4.76	5.01	5.85	6.57
2	Average-day demand after additionalconservation [b]		4.85	5.39	6.03
3	Reduction in average-day demand (line 1 less line 2)		0.160	0.460	0.540

* All units in MGD
[a] From Worksheet 2-1
[b] Based on Worksheet 6-3.

Worksheet 7-1: Modified Demand Forecast (Potable System)

Line	Item	Year (2008)	Year (2012)	Year (2022)	20-Year Forecast (2032)
1	Average-day demand with existing conservation [a]	3.40	3.83	4.54	5.15
2	Average-day demand after additional conservation [b]		3.77	4.30	4.85
3	Reduction in average-day demand (line 1 less line 2)		0.060	0.240	0.300
4	Maximum-day demand with existing conservation [a]	8.00	8.95	10.63	12.04
5	Maximum-day demand after additional conservation [b]		8.77	9.88	11.16
6	Reduction in maximum-day demand (line 4 less line 5)		0.180	0.750	0.880
7	Ratio maximum-day to average-day demand before conservation (line 4 divided by line 1)	2.35	2.34	2.34	2.34
8	Ratio maximum-day to average-day demand after conservation (line 5 divided by line 2)		2.33	2.30	2.30

* All units in MGD
[a] From Worksheet 2-1
[b] Based on Worksheet 6-3.

APPENDIX B

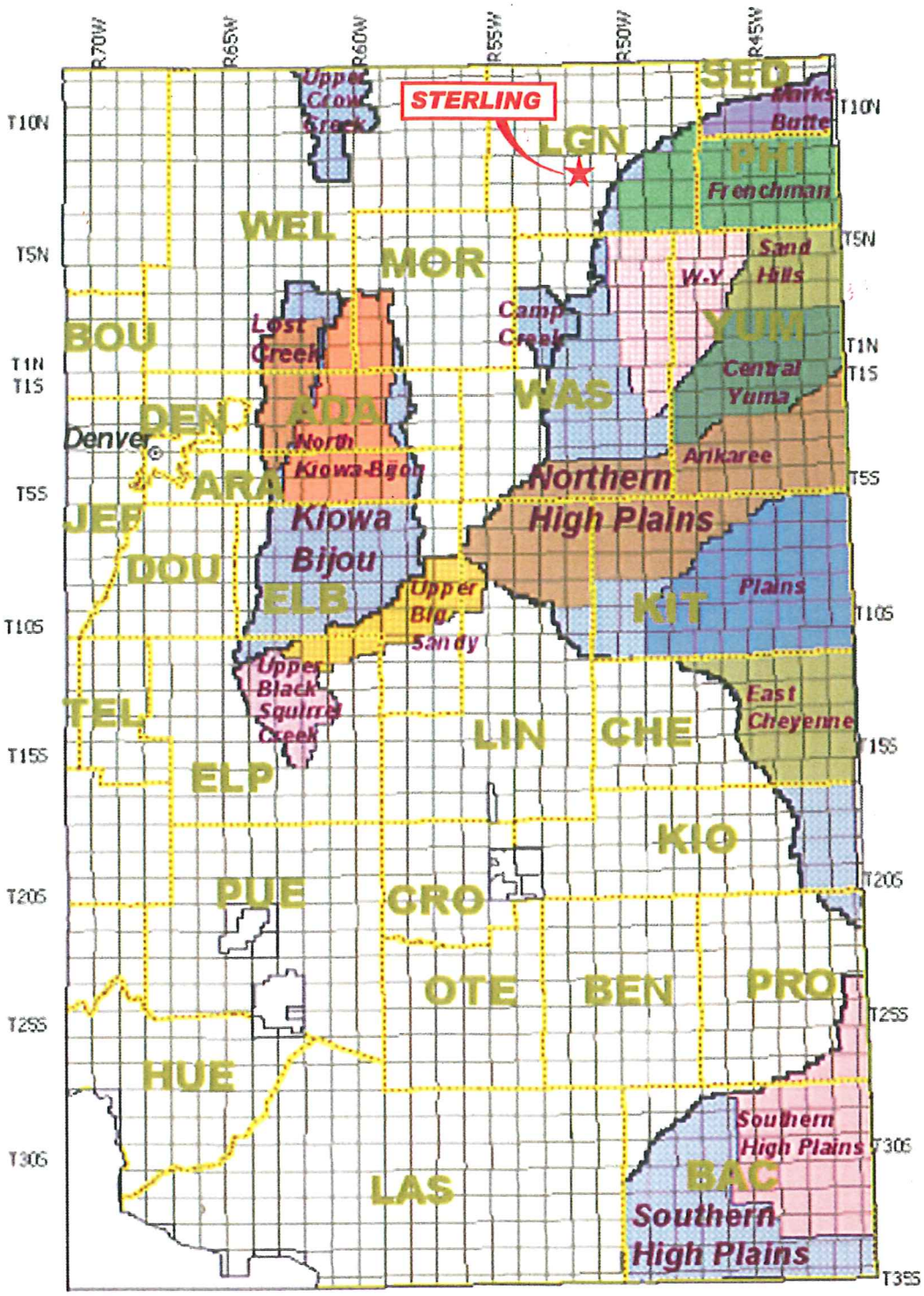

Designated Ground Water Basins and Ground Water Management Districts

County Boundary
Township/Range
Designated Basins
Capital

Management Districts within the Designated Basins
Arikaree
Central Yuma
East Cheyenne
Frenchman
Lost Creek
Marks Butte
North Kiowa Bijou
Plains
Sand Hills
Southern High Plains
Upper Big Sandy
Upper Black Squirrel Creek
W-Y

N
W
E
S

Appendix D

Technical Memorandums

Arber
Water, Wastewater & Reuse Engineers

TECHNICAL MEMORANDUM NO. 1

TO: Joseph Kiolbasa, P.E., City Manager, City of Sterling
FROM: Mark Beebe, P.E.
Rob Demis, P.E. RSD
DATE: October 31, 2008
JOB NO.: STRLNG01.4
SUBJECT: Sterling Water Treatment System
Uranium Concentration Evaluation and Well Operations Plan

PURPOSE

This Technical Memorandum (TM) describes the uranium concentration evaluation and well operations plan for the City of Sterling (City) to evaluate and determine appropriate interim measures to ensure that the water system is providing the best quality water available until the City implements improvements to ensure long term compliance. This TM is prepared as required in the Drinking Water Enforcement Order Number DC-080902-1, issued by the Colorado Department of Public Health and Environment (CDPHE) on September 2, 2008. This TM specifically addressed item No. 25 in the Compliance Order contained within the Enforcement Order.

INTRODUCTION

The City of Sterling is actively working to meet the requirements of the Enforcement Order and Compliance Order. Currently, the City's water system is in violation of two primary drinking water standards; uranium and total trihalomethanes. To ensure long term compliance, the City is working on planning and preliminary design for a water treatment system.

Evaluating appropriate interim measures to find reasonable and successful methods for mitigating uranium levels requires evaluating the following:

- Uranium Sampling – Used to determine uranium levels in each water source and which sources are more desirable
- Water System Operation – Ensure that adequate water can be supplied to City customers for normal uses and emergencies such as fire fighting
- Water Supply – Ensure that the most desirable water can legally be used

The following section provides background information on the City's existing water system.

BACKGROUND

The City of Sterling is located approximately 120 miles northeast of Denver along Highway I-76, and is located adjacent to the South Platte River. Primary water uses in the City of Sterling include residential and commercial water use, as well as irrigation. The City water system serves a residential population of approximately 13,900 people, and approximately 4,570 service taps.

The City's water system is currently supplied by 15 existing wells. The City recently has added two more wells (i.e., Scalva Well), which are not yet part of City's distribution system. The City intends to include these wells upon approval from the Colorado Department of Public Health and Environment (CDPHE). The City's existing wells have uranium concentrations that are near or above the drinking water standard of 30 μg/L.

There are two main well fields serving the City: the East Well Field located east of the City near highway I-76 with 11 wells, and the West Well Field located west of the City with 3 wells. One additional well is in the middle of the City. The City's wells are typically 60 to 100 feet deep. Water production for each well was supplied by the City in October 2008. Information for the City's wells, including the new wells, is summarized in Table 1 below.

Table 1: Summary of Wells and Water Production

Well Number	Well Field	Typical Water Production (GPM)
1	EAST	300
2	EAST	420
3	EAST	210
4	EAST	650
5	EAST	350
7	EAST	380
8	EAST	470
9	EAST	290
10	EAST	360
15	EAST	750
30	EAST	840
Scalva Well 1	EAST	1,250
Scalva Well 2	EAST	1,250
SUBTOTAL	**EAST**	**7,520**
11	WEST	500
12	WEST	1,035
13	WEST	740
SUBTOTAL	**WEST**	**2,275**
Columbine Well	IN CITY	960
Total Water Production		**10,755***

*Well 11, 12 and Columbine Well are seasonal wells. Well 13 is an emergency well.

The City of Sterling water system has two pressure zones containing four water storage tanks. The main pressure zone serves the majority of the City with the exception of a small area on the east side of the City, which is served by the second pressure zone. Two ground level tanks are located in the West Well Field and have water storage volumes of 7.5 million gallons and 2.0 million gallons. Two elevated tanks are located within the City (North and South Tanks), and both have a water storage volume of 250,000 gallons each.

The wells, storage tanks, and main transmission lines for water distribution are shown in Figure 1.

Primary water uses in the City of Sterling include residential and commercial water use, as well as irrigation. The City of Sterling supplied daily water production data for the time period of July 2003 to July 2004 and monthly production data from January 2006 to February 2008. The data was analyzed for the average day demand for each month and the peak day demand. The average day demand for the

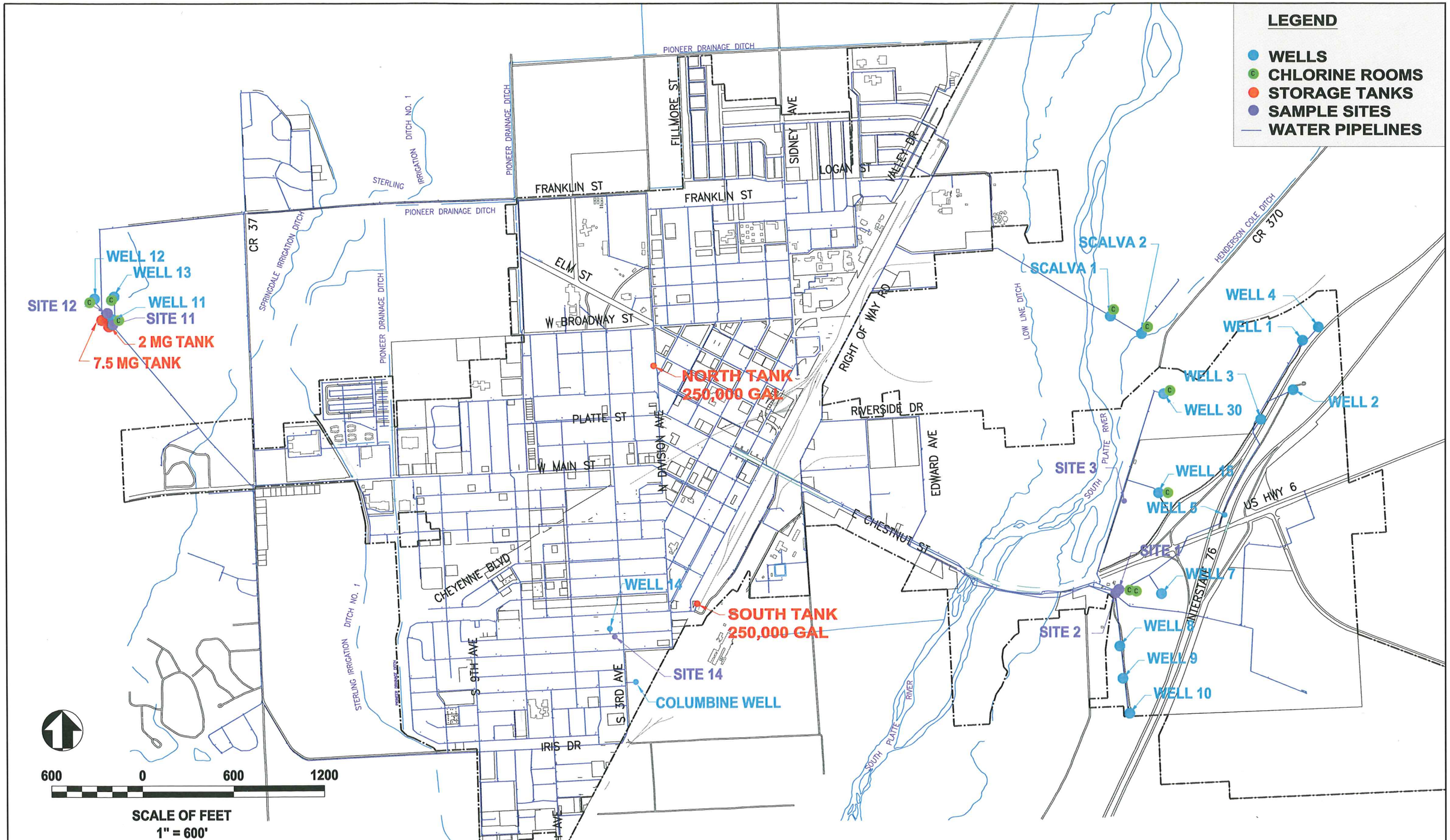

Arber
Water, Wastewater & Reuse Engineers
Richard P. Arber Associates
198 Union Boulevard, Suite 200
Lakewood, Colorado 80228
Website: www.arber.com
Phone: 303.831.4700
Fax: 303.831.0290

FIGURE 1
CITY OF STERLING
EXISTING WATER SYSTEM

noted time period is approximately 3.4 million gallons per day (mgd). The historical peak day demand for this period occurred on July 2006, and was approximately 7.3 mgd. A peak day demand of 8.5 mgd was identified for planning purposes.

Operation and control of the existing water system is based upon water level in the South Tank. As the water level in the tanks varies, certain wells are called to run via a radio telemetry system. These wells feed water directly into the potable water distribution system. All of the tanks "float" on the potable water distribution system. Once the South Tank has reached full operating level, the wells are called to shut down. Should the South Tank control system fail, the North Tank will become the controlling tank.

Sampling of the City's wells was performed for uranium. The following section presents the sampling results.

URANIUM SAMPLING

The City of Sterling is actively working to meet the requirements of the Enforcement Order and Compliance Order. As part of the Enforcement Order, water sampling of each well was performed for uranium in September 2008. The samples were analyzed at a certified laboratory. Copies of the results are included in Appendix A. The sampling result for each well is presented in Table 2.

Table 2: Summary of Uranium Concentrations by Well

Well Number**	Well Field	Uranium Concentration (µg/l)
1	EAST	41
2	EAST	28
3	EAST	43
4	EAST	25
5	EAST	16
7	EAST	37
8	EAST	32
9	EAST	5.5
10	EAST	3.3
15	EAST	47
30	EAST	44
Scalva Well 1	EAST	43
Scalva Well 2	EAST	33
11	WEST	38
12	WEST	40
13	WEST	Not Sampled
Columbine Well	IN CITY	54

** Well 14 is not connected to the potable system. Sampling was not performed for this well.

As can be seen from the sampling, concentrations fall below the drinking water standard of 30 µg/L in wells 2, 4, 5, 9, and 10. These wells are all located within the east well field. Wells 7, 8, 11, and Scalva 1 had concentrations between 30 µg/L and 40 µg/L. The remaining wells had uranium concentrations at or above 40 µg/L.

Previous sampling for uranium of some of the individual wells was performed by Sterling in 2004 through 2008. These sample results are presented in Appendix B. Based upon previous samples and sampling performed in September 2008, the following conclusions were developed:

- Wells 2, 4 and 5 had uranium concentrations below the drinking water standard of 30 µg/L in all samples
- Well 9 had uranium concentrations below the drinking water standard of 30 µg/L in one sample and above 40 µg/L in two samples
- Well 10 had uranium concentrations below the drinking water standard of 30 µg/L in one sample, no other samples were taken
- Wells 7, 8 and 11 had uranium concentrations between 30 µg/L and 40 µg/L in all samples

- Well 12 had uranium concentrations between 30 μg/L and 40 μg/L in five samples and one sample below 30 μg/L and one sample above 40 μg/L
- The remaining wells generally had uranium concentrations at or above 40 μg/L

The following section presents the current operation of the wells.

WATER SYSTEM WELL OPERATIONS

The water system is currently operated based upon tanks level, as monitored in the South 250,000 gallon tank located within the City. Table 3 presents the well operation, based upon tank level:

Table 3: Existing System Operation (Summer Tank Level)

Tank Level (FT)	Wells Called to Run	Water Production (GPM)	Well Field	Notes
20.5	None	0	N/A	High Water Level
Falls to 18.5	1, 2, 4, 8 and 30	2,680	East	Wells Off at 20.5 Ft
Falls to 18.0	5, 7, 9 and 15	1,770	East	Wells Off at 20.0 Ft
Falls Below 18.0	*3 and *10	570	East	Equals Peak Day Demand
Falls Below 18.0	*Scalva 1 and *Scalva 2	2,500	East	
Emergency Situation	All	9,795	East and West	

*Awaiting CDPHE Approval of Wells

The current SCADA system has the capability to automatically operate wells at two tank level set points. Manual operation of the wells below the second set point (18.0 feet in summer tank level setting) is performed. During the winter (November through March), the levels in the water storage tanks are reduced by 1 -2 feet as there is no irrigation demand.

The current configuration of the system allows for use of the east well field during normal operations. The following are limitations on the existing system configuration:

1. The City strives to maintain a minimum of 18.5 feet in the South Tank during the summer (April through October). As reported by the City, this elevation is required to keep an active storage

volume of 5.2 million gallons in the system to allow for operational issues associated with irrigation demands and provide for fire fighting capabilities.

2. The water production from the wells called to run at a tank level of 18.5 feet should meet or exceed the average day demand (3.4 mgd).
3. The water production from the wells called to run at a tank level below 18.0 feet should meet or exceed the peak day demand (7.3 mgd).
4. Several of the wells have nitrate concentrations that are near or above the drinking water standard of 10 mg/L. These wells are primarily located in the west well field. Due to the elevated levels of nitrate concentrations, it is recommended that these wells only be called to operate during emergency situations.
5. Concentrations of total organic carbon (TOC) are believed to have contributed to previous violations for total trihalomethanes (TTHM's). Wells with high concentrations of TOC are limited in usage to reduce the potential for TTHM formation. Sample results for TOC are presented in Appendix C.

The following section presents the water supply available to the City.

WATER SUPPLY

The City has a potable water supply well production capacity of approximately 10,755 gpm if all wells are in operation. There are no water rights restrictions regarding which wells can be operated and when they can be operated.

The following restrictions limit the operational flexibility of the system:

1. Wells 14 is only used for return flows and is not connected to the potable water system
2. Well 13 is located in the west well field and is used as an emergency well
3. Wells 11, 12 and Columbine Well are seasonal wells
4. Wells 3 and 10 are redeveloped wells and Scalva 1 and Scalva 2 are new wells. These wells are awaiting CDPHE approval

The following section presents the evaluation of the system for providing water with the lowest concentrations of uranium.

EVALUATION

Evaluating appropriate interim measures to find reasonable and successful methods for mitigating uranium levels requires evaluating the following:

- Uranium Sampling – Used to determine uranium levels in each water source and which source is more desirable
- Water System Operation – Ensure that adequate water can be supplied to City customers for normal uses and emergencies such as fire fighting
- Water Supply Quality – Determine that the most desirable wells for uranium do not contain other contaminates that may degrade water quality

The following criteria were used to develop the order of operation of the wells:

- Lowest uranium concentrations
- Limit the formation of TTHM's
- Legal right to use the water from each source
- Ability to operate the well without making significant system modifications

The order of operation of the wells may reduce the uranium concentrations in the system during the average day demand. Wells 2, 4 and 5 have exhibited the lowest uranium levels and are therefore called to run first. The remaining wells are called to run in a stepped sequence to meet the average day demand and peak day demand. Wells with the lowest uranium concentrations are called to run first. The proposed order of operation is shown in Table 4.

Table 4: Future System Operation to Reduce Uranium Concentrations

Tank Level (FT)	Wells Called to Run	Water Production (GPM)	Well Field	Notes
20.5	None	0	N/A	High Water Level
Falls to 19.0	2, 4 and 5	1,420	East	Wells Off at 20.5 Ft
Falls to 18.5	7, 8 and 9	1,140	East	Wells Off at 20.0 Ft
Falls to 18.0	1 and 15	1,050	East	Wells Off at 19.5 Ft
Falls Below 18.0	*3, *10 and 30	1,410	East	Equals Peak Day Demand
Falls Below 18.0	*Scalva 1 and *Scalva 2	2,500	East	
Emergency Situation	All	9,795	East and West	All except for Well 14

*Awaiting CDPHE Approval of Wells

Well 14 will continue to be used to provide return flows to the South Platte River and will not be connected to the potable water system.

The tank levels shown in Table 4 reflect water setting for the summer period. Tank level settings are typically adjusted in November and April of each year due to irrigation demands. As tank level settings are adjusted, the order of operation of the wells will remain consistent. Should maintenance or repair of a well be necessary, specific wells called to run at each tank level set point may be adjusted to allow the system to provide the necessary amount of water.

The following section presents the proposed implementation plan for the City's water supply system.

IMPLEMENTATION

The order of operation of the wells may be implemented through programming changes in the SCADA system. The programming changes will be implemented by Sterling starting in November 2008. The changes will be completed in December 2008 or January 2009 when a new SCADA system is installed. The new SCADA system will provide automatic operation for more than two tank level set points.

APPENDIX A

Evergreen Analytical, Inc.

4036 Youngfield Street, Wheat Ridge, Colorado 80033-3862
(303) 425-6021

Client Project ID PWSID CO0138045
Date Received: 9/30/08

Lab Order: 08-7447
Date Prepared: 10/3/08
Units: mg/L

Metals, Drinking Water
Uranium

Method: E200.8 **Prep Method: E200.8**

Lab ID	Client ID	Matrix	Date Collected	Date Analyzed	Results	LOL	DF
08-7447-01A	Well 8	Drinking Water	9/23/08	10/9/08	0.032 *	0.0010	1
08-7447-02A	Well 2	Drinking Water	9/23/08	10/9/08	0.028	0.0010	1
08-7447-03A	Well 3	Drinking Water	9/23/08	10/9/08	0.043 *	0.0010	1
08-7447-04A	Well 1	Drinking Water	9/23/08	10/9/08	0.041 *	0.0010	1
08-7447-05A	Well 4	Drinking Water	9/23/08	10/9/08	0.025	0.0010	1
08-7447-06A	Well 30	Drinking Water	9/23/08	10/9/08	0.044 *	0.0010	1
08-7447-07A	Well 12	Drinking Water	9/23/08	10/9/08	0.040 *	0.0010	1
08-7447-08A	Well 5	Drinking Water	9/23/08	10/9/08	0.016	0.0010	1
08-7447-09A	Well 9	Drinking Water	9/23/08	10/9/08	0.0055	0.0010	1
08-7447-10A	Well 7	Drinking Water	9/23/08	10/9/08	0.037 *	0.0010	1
08-7447-11A	Well 15	Drinking Water	9/26/08	10/9/08	0.047 *	0.0010	1
08-7447-12A	Well 11	Drinking Water	9/24/08	10/9/08	0.038 *	0.0010	1
08-7447-13A	Well 10	Drinking Water	9/24/08	10/9/08	0.0033	0.0010	1
08-7447-14A	Scalva Well 1	Drinking Water	9/29/08	10/9/08	0.043 *	0.0010	1
08-7447-15A	Columbine Well	Drinking Water	9/29/08	10/9/08	0.054 *	0.0010	1
08-7447-16A	Scalva Well 2	Drinking Water	9/29/08	10/9/08	0.033 *	0.0010	1

Analyst

Approved

Qualifiers:
B - Analyte detected in the associated Method Blank, value not subtracted from result
E - Extrapolated value. Value exceeds calibration range
H - Sample analysis exceeded analytical holding time
J - Indicates an estimated value when the compound is detected, but is below the LQL
S - Spike Recovery outside accepted limits
U - Compound analyzed for but not detected
X - See case narrative
* -Value exceeded the Maximum Contamination Level (MCL), TCLP limit, or if compound is undetected, LQL exceeds MCL

Definitions:
DF - Dilution Factor
PF - Prep Factor
LQL - Lower Quantitation Limit

Print Date: 10/13/08

APPENDIX B

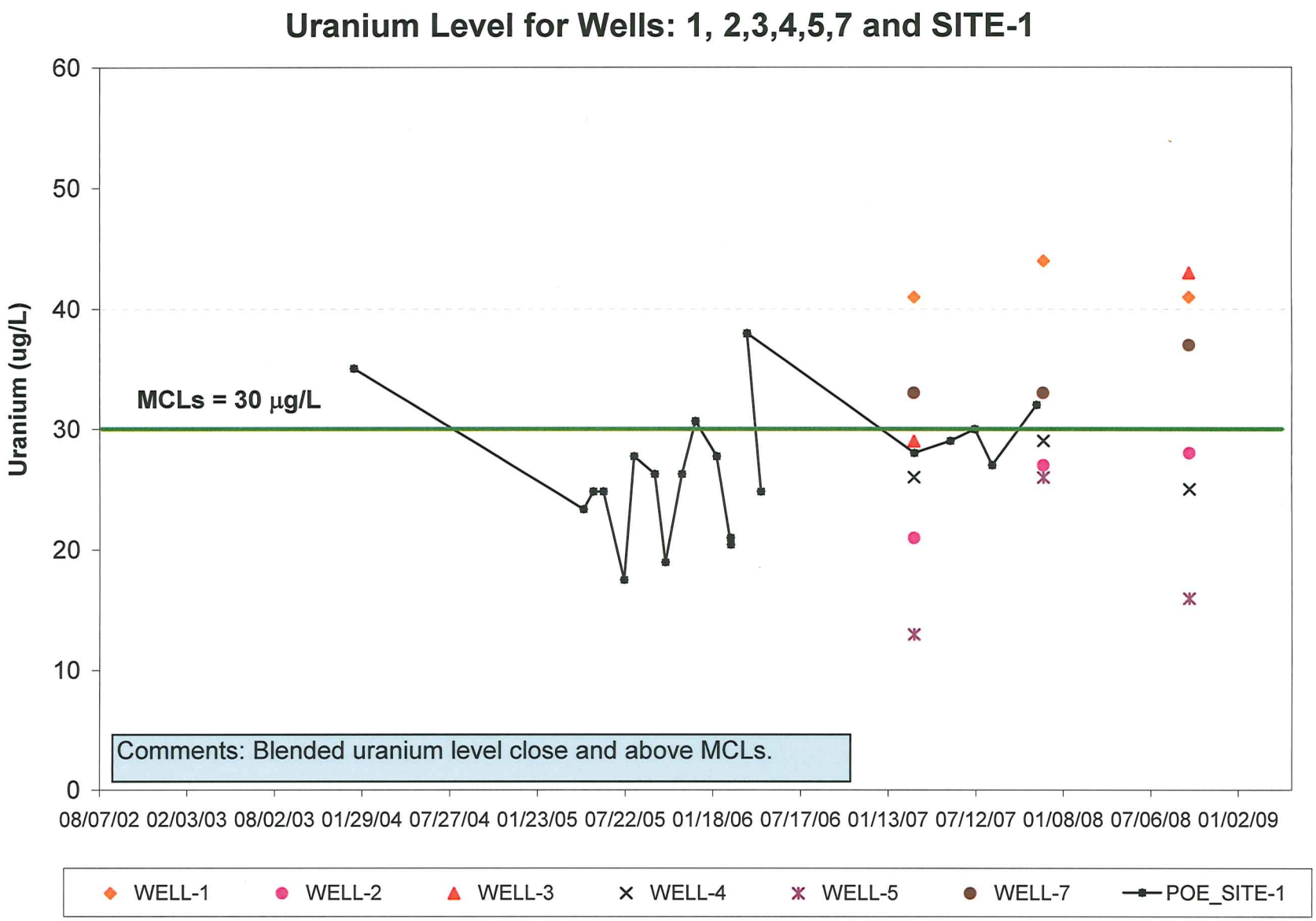
Uranium Level for Wells: 1, 2,3,4,5,7 and SITE-1
Uranium (ug/L)
60
50
40
30
20
10
0
MCLs = 30 µg/L
Comments: Blended uranium level close and above MCLs.
08/07/02 02/03/03 08/02/03 01/29/04 07/27/04 01/23/05 07/22/05 01/18/06 07/17/06 01/13/07 07/12/07 01/08/08 07/06/08 01/02/09
WELL-1
WELL-2
WELL-3
WELL-4
WELL-5
WELL-7
POE_SITE-1

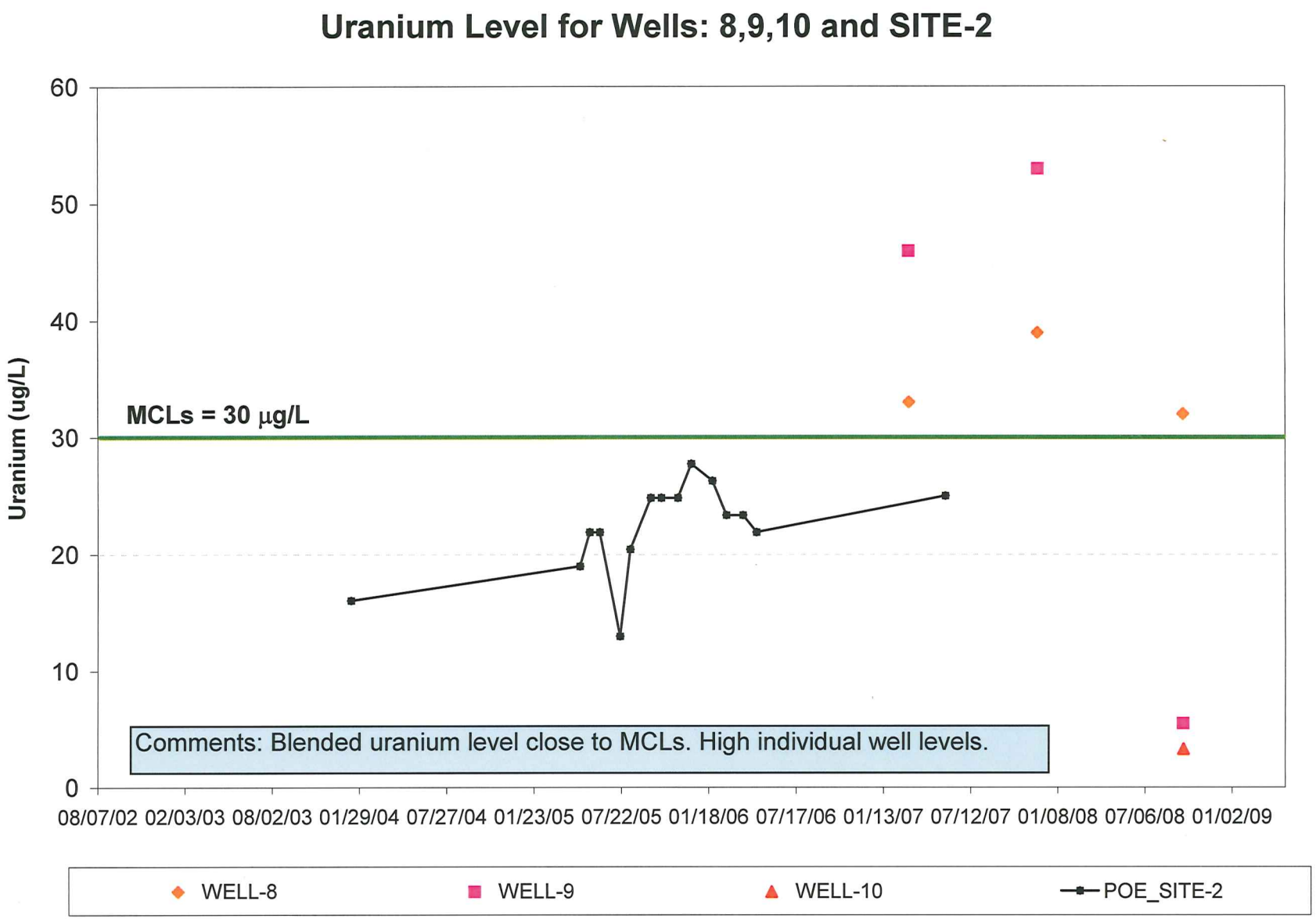
Uranium Level for Wells: 8,9,10 and SITE-2
Uranium (ug/L)
60
50
40
30
20
10
0
MCLs = 30 µg/L
Comments: Blended uranium level close to MCLs. High individual well levels.
08/07/02 02/03/03 08/02/03 01/29/04 07/27/04 01/23/05 07/22/05 01/18/06 07/17/06 01/13/07 07/12/07 01/08/08 07/06/08 01/02/09
WELL-8
WELL-9
WELL-10
POE_SITE-2

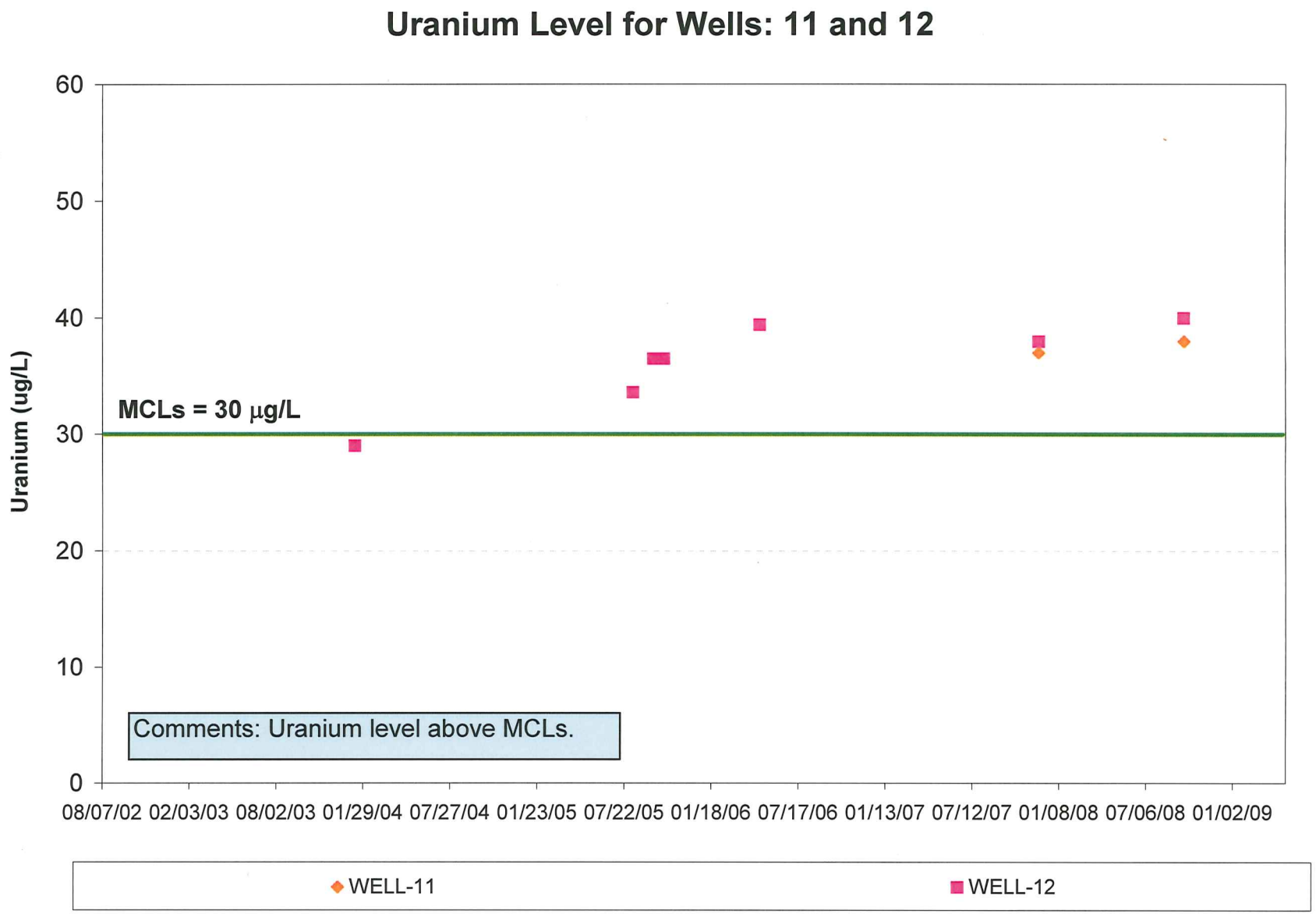
Uranium Level for Wells: 11 and 12
Uranium (ug/L)
60
50
40
30
20
10
0
MCLs = 30 µg/L
Comments: Uranium level above MCLs.
08/07/02 02/03/03 08/02/03 01/29/04 07/27/04 01/23/05 07/22/05 01/18/06 07/17/06 01/13/07 07/12/07 01/08/08 07/06/08 01/02/09
WELL-11
WELL-12

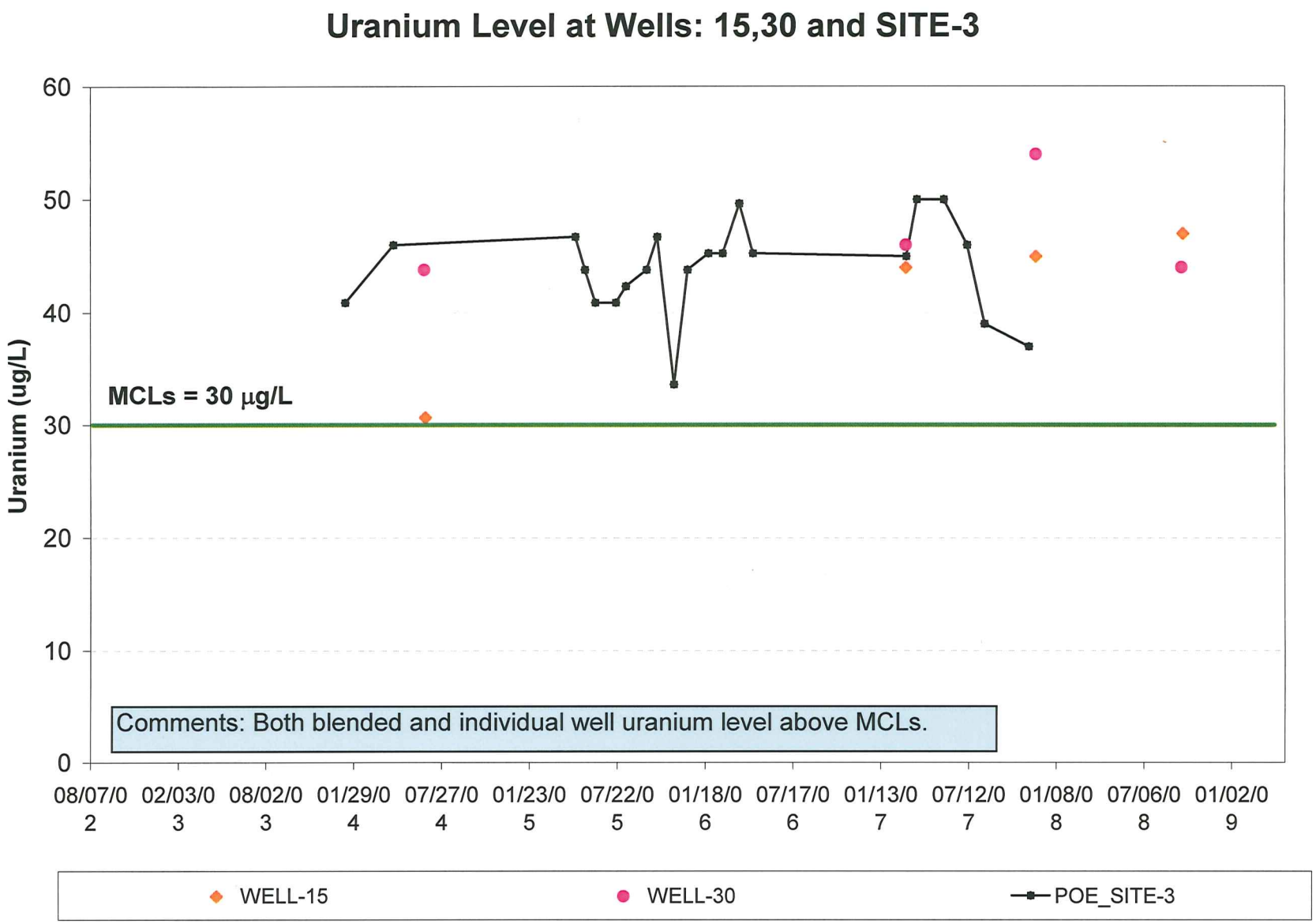
Uranium Level at Wells: 15,30 and SITE-3
Uranium (ug/L)
60
50
40
30
20
10
0
MCLs = 30 µg/L
Comments: Both blended and individual well uranium level above MCLs.
08/07/02
02/03/03
08/02/03
01/29/04
07/27/04
01/23/05
07/22/05
01/18/06
07/17/06
01/13/07
07/12/07
01/08/08
07/06/08
01/02/09
WELL-15
WELL-30
POE_SITE-3

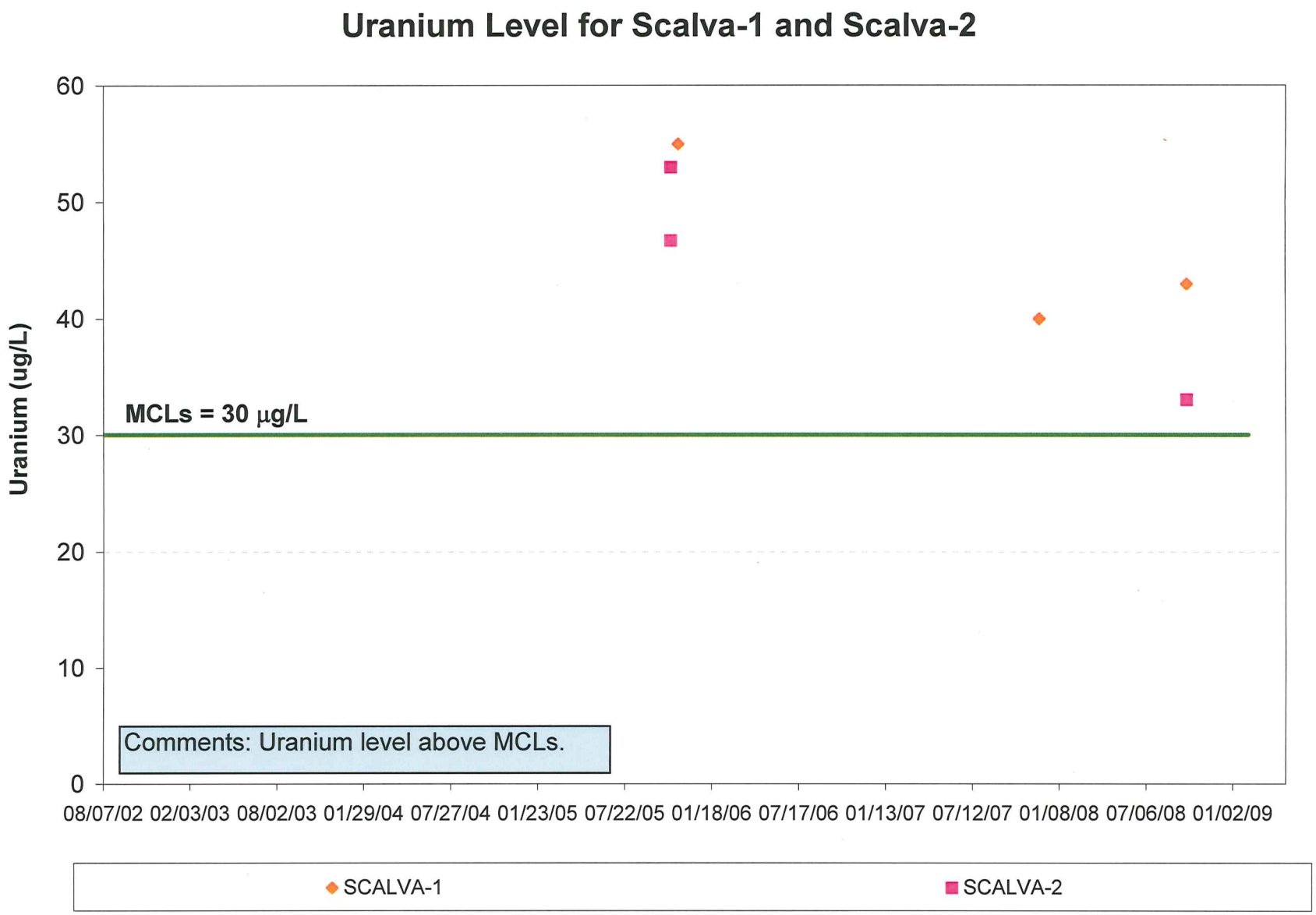
Uranium Level for Scalva-1 and Scalva-2
Uranium (ug/L)
60
50
40
30
20
10
0
MCLs = 30 µg/L
Comments: Uranium level above MCLs.
08/07/02
02/03/03
08/02/03
01/29/04
07/27/04
01/23/05
07/22/05
01/18/06
07/17/06
01/13/07
07/12/07
01/08/08
07/06/08
01/02/09
SCALVA-1
SCALVA-2

APPENDIX C

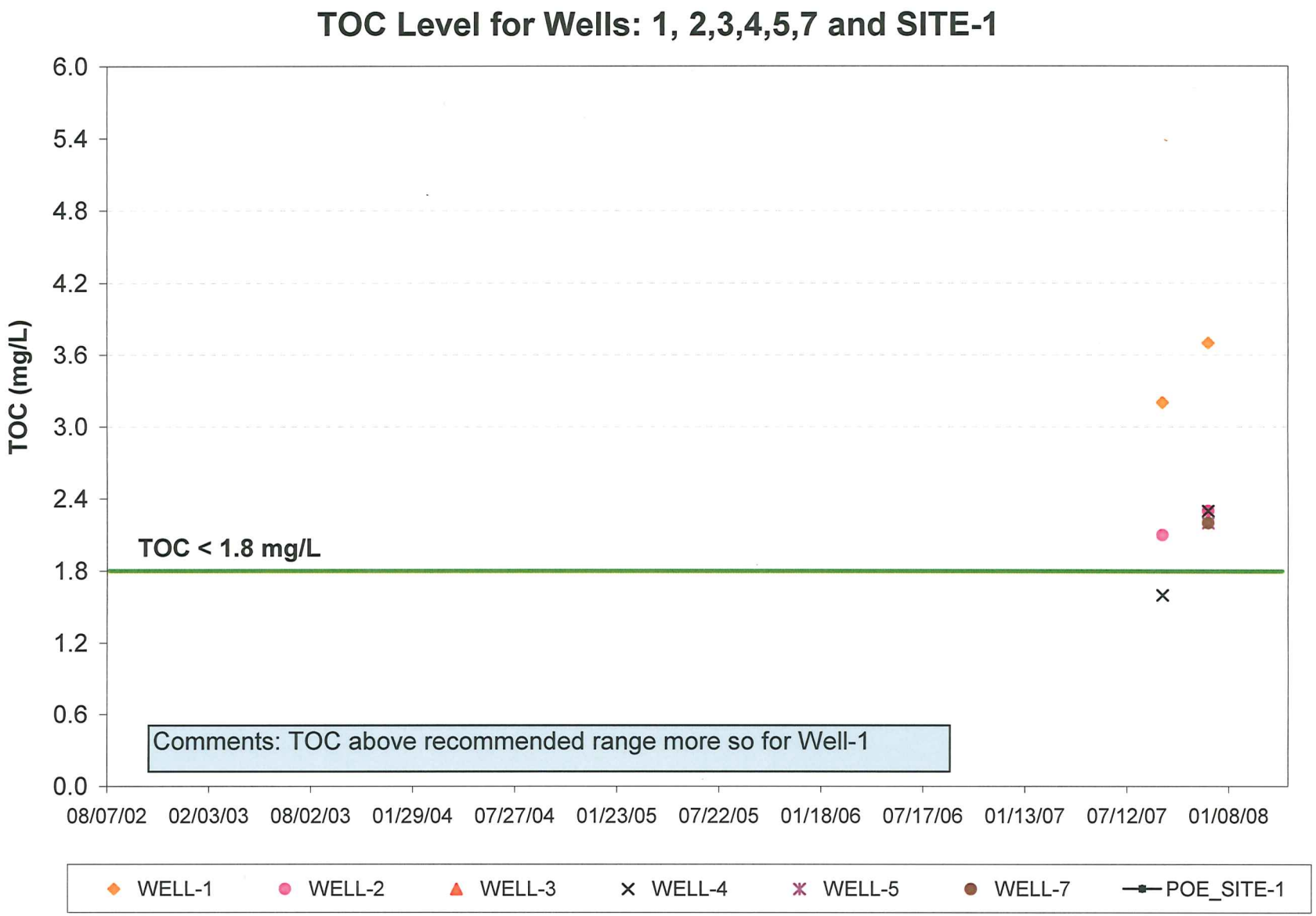
TOC Level for Wells: 1, 2,3,4,5,7 and SITE-1
TOC (mg/L)
6.0
5.4
4.8
4.2
3.6
3.0
2.4
1.8
1.2
0.6
0.0
TOC < 1.8 mg/L
Comments: TOC above recommended range more so for Well-1
08/07/02
02/03/03
08/02/03
01/29/04
07/27/04
01/23/05
07/22/05
01/18/06
07/17/06
01/13/07
07/12/07
01/08/08
WELL-1
WELL-2
WELL-3
WELL-4
WELL-5
WELL-7
POE_SITE-1

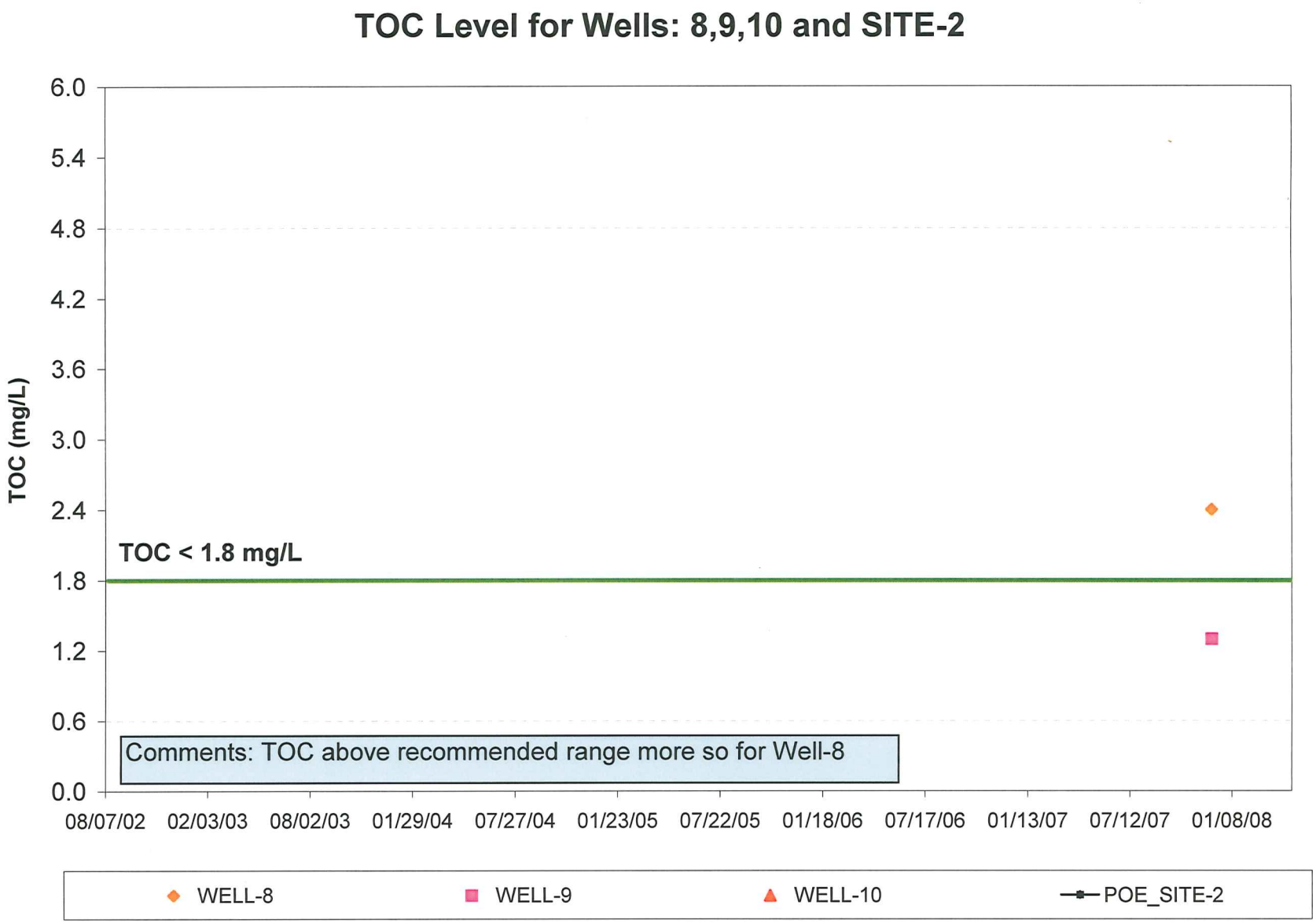
TOC Level for Wells: 8,9,10 and SITE-2
TOC (mg/L)
6.0
5.4
4.8
4.2
3.6
3.0
2.4
1.8
1.2
0.6
0.0
TOC < 1.8 mg/L
Comments: TOC above recommended range more so for Well-8
08/07/02
02/03/03
08/02/03
01/29/04
07/27/04
01/23/05
07/22/05
01/18/06
07/17/06
01/13/07
07/12/07
01/08/08
WELL-8
WELL-9
WELL-10
POE_SITE-2

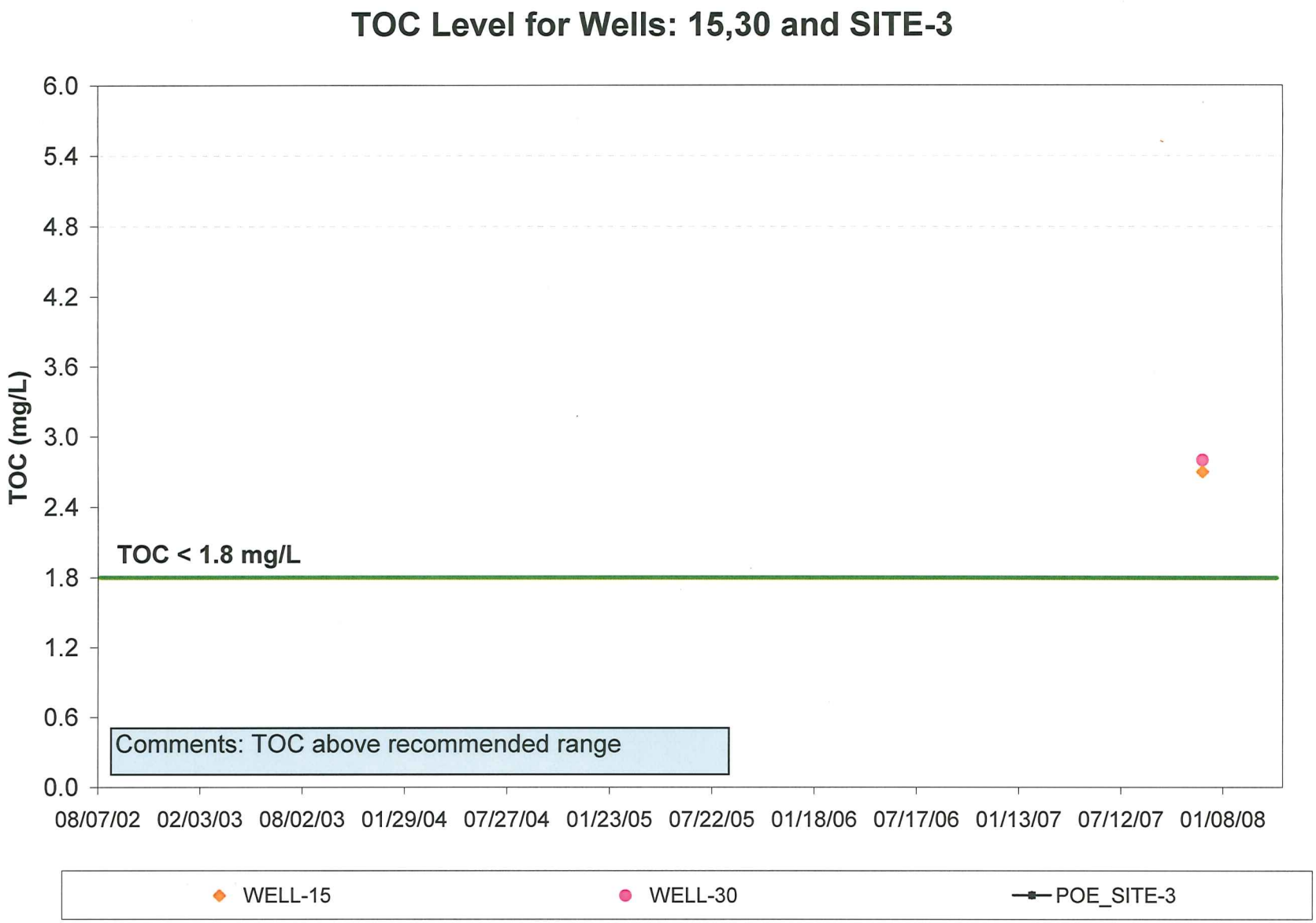
TOC Level for Wells: 15,30 and SITE-3
TOC (mg/L)
6.0
5.4
4.8
4.2
3.6
3.0
2.4
1.8
1.2
0.6
0.0
TOC < 1.8 mg/L
Comments: TOC above recommended range
08/07/02
02/03/03
08/02/03
01/29/04
07/27/04
01/23/05
07/22/05
01/18/06
07/17/06
01/13/07
07/12/07
01/08/08
WELL-15
WELL-30
POE_SITE-3

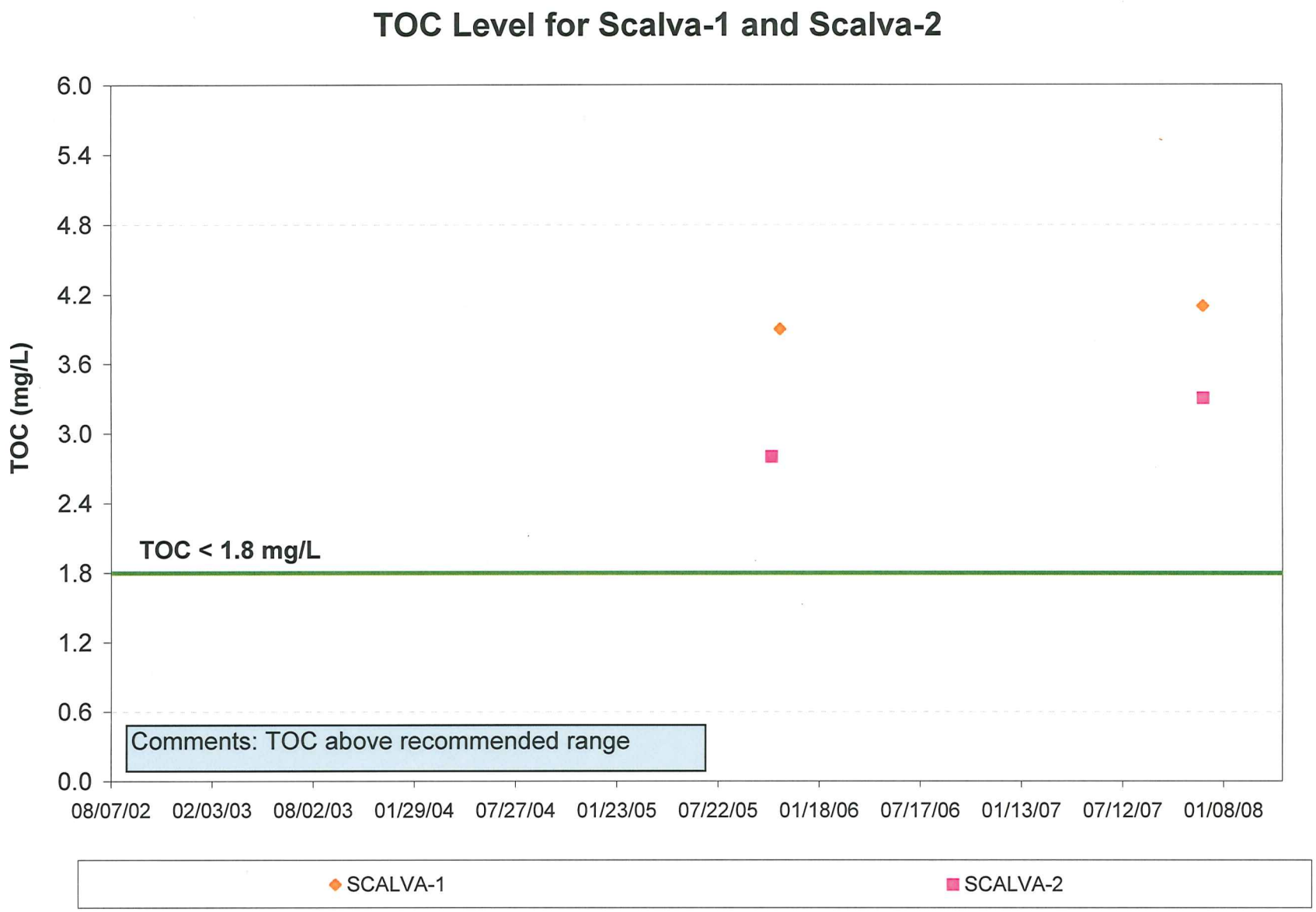
TOC Level for Scalva-1 and Scalva-2
TOC (mg/L)
6.0
5.4
4.8
4.2
3.6
3.0
2.4
1.8
1.2
0.6
0.0
TOC < 1.8 mg/L
Comments: TOC above recommended range
08/07/02
02/03/03
08/02/03
01/29/04
07/27/04
01/23/05
07/22/05
01/18/06
07/17/06
01/13/07
07/12/07
01/08/08
SCALVA-1
SCALVA-2

TECHNICAL MEMORANDUM NO. 2

TO: Joseph Kiolbasa, P.E., City Manager, City of Sterling
FROM: Rob Demis, P.E.
D. Ryan Walsh
DATE: December 22, 2008
JOB NO.: STRLNG02
SUBJECT: Sterling Water Treatment System
Total Trihalomethanes Evaluation and Interim Improvements Plan

PURPOSE

This Technical Memorandum (TM) describes the total trihalomethanes (TTHM) evaluation and operations plan for the City of Sterling (City) to evaluate and determine appropriate interim measures to ensure that the water system is providing the best quality water available until the City implements improvements to ensure long term compliance. This TM is prepared as required in the Drinking Water Enforcement Order Number DC-080902-1, issued by the Colorado Department of Public Health and Environment (CDPHE) on September 2, 2008. This TM specifically addressed item No. 26 in the Compliance Order contained within the Enforcement Order.

INTRODUCTION

The City of Sterling is actively working to meet the requirements of the Enforcement Order and Compliance Order. Currently, the City's water system is in violation of two primary drinking water standards; uranium and TTHM. To ensure long-term compliance, the City is working on planning and preliminary design for a water treatment system.

Evaluating appropriate interim measures to find reasonable and successful methods for mitigating TTHM levels requires evaluating the following:

- TTHM Sampling – Used to determine current levels in the water system
- Water System Operation – Ensure that adequate water can be supplied to City customers for normal uses and emergencies such as fire fighting
- Water Supply – Ensure that the most desirable water can legally be used

The following section provides background information on the City's existing water system.

BACKGROUND

The City of Sterling is located approximately 120 miles northeast of Denver along Highway I-76, and is located adjacent to the South Platte River. Primary water uses in the City of Sterling include residential, commercial, and industrial water use, as well as irrigation. The City water system serves a residential population of approximately 13,900 people, and approximately 4,570 service taps.

The City's water system is currently supplied by 15 existing wells. The City recently has added two more wells (i.e., the Scalva Wells), which are not yet part of City's distribution system. The City intends to include these wells upon approval from the CDPHE. The City's existing wells have uranium concentrations that are near or above the drinking water standard of 30 μg/L. The running annual average for TTHM is near or above the drinking water standard of 80 μg/L.

There are two main well fields serving the City: the East Well Field located east of the City near highway I-76 with 11 wells, and the West Well Field located west of the City with 3 wells. One additional well is in the middle of the City. The City's wells are typically 60 to 100 feet deep. Water production for each well was supplied by the City in October 2008.

The City has a potable water supply well production capacity of approximately 9,795 gpm if all wells are in operation. There are no water rights restrictions regarding which wells can be operated and when they can be operated.

The following restrictions limit the operational flexibility of the system:

1. Well 14 is only used for return flows and is not connected to the potable water system.
2. Well 13 is located in the west well field and is used as an emergency well.
3. Wells 11 and 12 are seasonal wells.
4. Columbine Well is used for irrigation only with an emergency connection to the distribution system.
5. Wells 3 and 10 are redeveloped wells and Scalva 1 and Scalva 2 are new wells. These wells are awaiting CDPHE approval.

Information for the City's wells, including the new wells, is summarized in Table 1 below.

Table 1: Summary of Wells and Water Production

Well Number	Well Field	Typical Water Production (GPM)
1	EAST	300
2	EAST	420
3	EAST	210
4	EAST	650
5	EAST	350
7	EAST	380
8	EAST	470
9	EAST	290
10	EAST	360
15	EAST	750
30	EAST	840
Scalva Well 1	EAST	1,250
Scalva Well 2	EAST	1,250
SUBTOTAL	**EAST**	**7,520**
11	WEST	500
12	WEST	1,035
13	WEST	740
SUBTOTAL	**WEST**	**2,275**
Total Water Production		**9,795***

*Wells 11 and 12 are seasonal wells. Well 13 is an emergency well.

The City of Sterling water system has two pressure zones containing four water storage tanks. The main pressure zone serves the majority of the City with the exception of a small area on the east side of the City, which is served by the second pressure zone. Two ground level tanks are located in the West Well Field and have water storage volumes of 7.5 million gallons (MG) and 2.0 MG. Two elevated tanks are located within the City (North and South Tanks), and both have a water storage volume of 250,000 gallons each.

The wells, storage tanks, and main transmission lines for water distribution are shown in Figure 1.

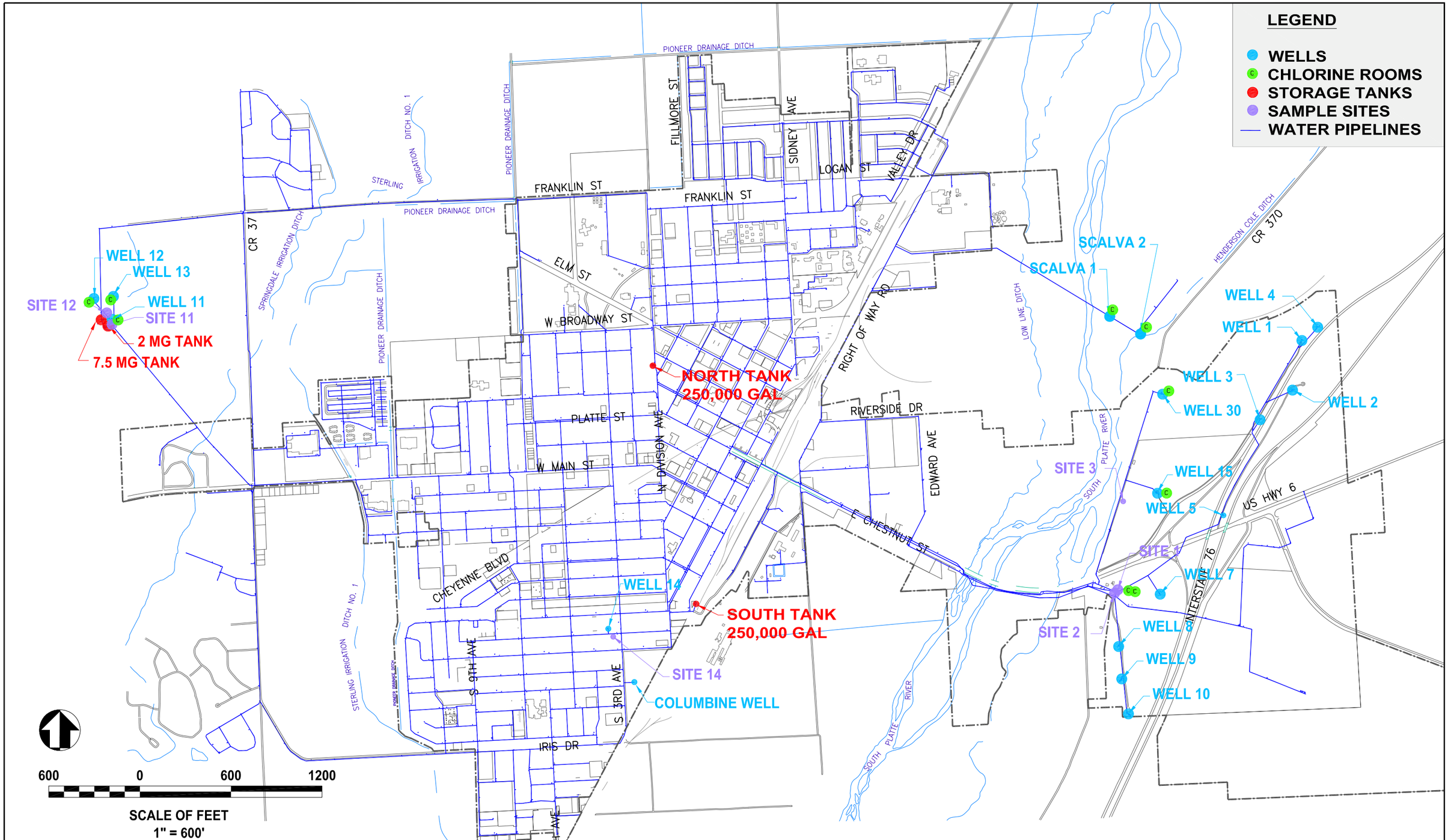

Arber
Water, Wastewater & Reuse Engineers
Richard P. Arber Associates
198 Union Boulevard, Suite 200
Lakewood, Colorado 80228
Website: www.arber.com
Phone: 303.831.4700
Fax: 303.831.0290

FIGURE 1
CITY OF STERLING
EXISTING WATER SYSTEM

The City supplied water production data for the time period of January 2006 to December 2007. Based on this data for the two years, the average day demand for the noted time period is approximately 3.4 million gallons per day (mgd). The monthly production data for last two years was used to identify the peak month, which occurred in June 2006. Daily water production data for June 2006 was analyzed to determine the peak day demand, which occurred on June 15, 2006, with a demand of 8.0 mgd. A peak day demand of 8.5 mgd was identified for planning purposes.

Operation and control of the existing water system is based upon water level in the South Tank. As the water level in the tanks varies, certain wells are called to run via a radio telemetry system. These wells feed water directly into the potable water distribution system. All of the tanks "float" on the potable water distribution system. Once the South Tank has reached full operating level, the wells are called to shut down. Should the South Tank control system fail, the North Tank will become the controlling tank.

Disinfection of the water system is performed using chlorine gas injected at specific wells or at specific junction points from wells in distribution system. Chlorine levels are monitored at specific points in the distribution system.

Sampling results of the City's water system for TTHM is presented in the following section.

TTHM SAMPLING

Samples for TTHM are collected at the following points in the distribution system.

- 109 Park Circle (residential area on the west side of the City)
- 14320 Greenway & 14076 Cottonwood (residential area on the north west side of the City)
- 114 Hillside (residential area on the south west side of the City)
- 621 Iris (just south of the hospital on the south side of the City)

The City of Sterling is actively working to meet the requirements of the Enforcement Order and Compliance Order. The results of sampling for TTHM indicate that the running annual average is below the drinking water standard of 80 μg/L. Table 2 presents the running annual average (RAA):

Table 2: TTHM Sampling and Running Annual Average

TTHM in micrograms per liter (μg/L)				
1st Quarter 2008	2nd Quarter 2008	3rd Quarter 2008	4th Quarter 2008	RAA=
50	42	49	47	47 μg/L

As identified in Table 2, the system is currently in compliance with the drinking water standard of a running annual average of 80 μg/L. As recently as the fourth quarter of 2007, the system exceeded the drinking water standard running annual average of 80 μg/L. The recent system compliance is believed to be due to the following:

- Order of well operation was adjusted by the City in early 2008 to utilize wells with lower total organic carbon (TOC)
- A reduction in the volume of water stored was implemented by the City in early 2008

The following section presents the current operation of the wells after changes were implemented to reduce the level of uranium in the drinking water system.

WATER SYSTEM WELL OPERATIONS

The order of operation of the wells may reduce the uranium concentrations in the system during the average day demand. Wells 2, 4 and 5 have exhibited the lowest uranium levels and are therefore called to run first. The remaining wells are called to run in a stepped sequence to meet the average day demand and peak day demand. Wells with the lowest uranium concentrations are called to run first. Concentrations of TOC are believed to have contributed to previous violations for TTHM's. Wells with high concentrations of TOC are limited in usage to reduce the potential for TTHM formation. Sample results for TOC are presented in Appendix A. The order of operation is shown in Table 3.

Table 3: System Operation to Reduce Uranium Concentrations

Tank Level (FT)	Wells Called to Run	Water Production (GPM)	Well Field	Notes
20.5	None	0	N/A	High Water Level
Falls to 19.0	2, 4 and 5	1,420	East	Wells Off at 20.5 Ft
Falls to 18.5	7, 8 and 9	1,140	East	Wells Off at 20.0 Ft
Falls to 18.0	1 and 15	1,050	East	Wells Off at 19.5 Ft
Falls Below 18.0	*3, *10 and 30	1,410	East	Equals Peak Day Demand
Falls Below 18.0	*Scalva 1 and *Scalva 2	2,500	East	
Emergency Situation	All	9,795	East and West	All except for Well 14 and Columbine Well

*Awaiting CDPHE Approval of Wells

Well 14 will continue to be used to provide return flows to the South Platte River and will not be connected to the potable water system. The Columbine Well will continue to be used for irrigation with an emergency connection to the potable water system.

The tank levels shown in Table 3 reflect the settings for the summer period. Tank level settings are typically adjusted in November and April of each year due to irrigation demands. As tank level settings are adjusted, the order of operation of the wells will remain consistent. Should maintenance or repair of a well be necessary, specific wells called to run at each tank level set point may be adjusted to allow the system to provide the necessary amount of water.

The following section presents the evaluation of the system for providing water with the lowest concentrations of TTHM's.

EVALUATION

Evaluating appropriate interim measures to find reasonable and successful methods for mitigating TTHM levels requires evaluating the following:

- TTHM Sampling – Used to determine current levels in the water system.
- Water System Modeling – Used to determine water age in the system and develop methods of reducing water age and the adequacy of the TTHM sampling locations.

- Chlorine Disinfection Dosage Monitoring – Used to evaluate chlorine dosage and residual.
- Water System Operation – Ensure that adequate water can be supplied to City customers for normal uses and emergencies such as fire fighting.
- Water Supply Quality – Determine that the most desirable wells for TOC levels do not contain other contaminates, such as uranium, that may degrade water quality.

The following criteria were used to develop appropriate interim measures to find reasonable and successful methods for mitigating TTHM levels:

- Lowest TOC concentrations
- Limit the formation of TTHM's through controlling the chlorine dosage and residual
- Ability to operate the system without making significant system modifications
- Increase the water quality in regards to TTHM's without degrading water quality due to uranium

The following items were performed to evaluate the criteria:

- Wells with the lowest TOC concentrations and the lowest uranium levels were identified
- Hydraulic modeling of the water system to determine water age, system storage capacity and chlorine residual was performed using WaterCAD, Version 8
- The minimum needed fire flow and storage for fire fighting was determined for the system

The following presents the results of the evaluation:

- Wells with the lowest concentrations of TOC and uranium levels are called to run first. Wells with high concentrations of TOC and uranium are limited in usage to reduce the concentration of uranium and the potential for TTHM formation.
- Hydraulic modeling of the water system under existing conditions indicates water ages in the system ranging from 0.25 days in the high density residential areas in the central parts of the city to 9.4 days in a residential area on the far west side of the city near the 7.5 MG and 2.0 MG tanks. Comparing these results with the current sampling locations for TTHM indicates that the sampling locations encompass the most likely areas with the highest water age and are adequate for monitoring the most likely areas for TTHM formation. Figure 2 illustrates the average water age in the distribution system under existing conditions.

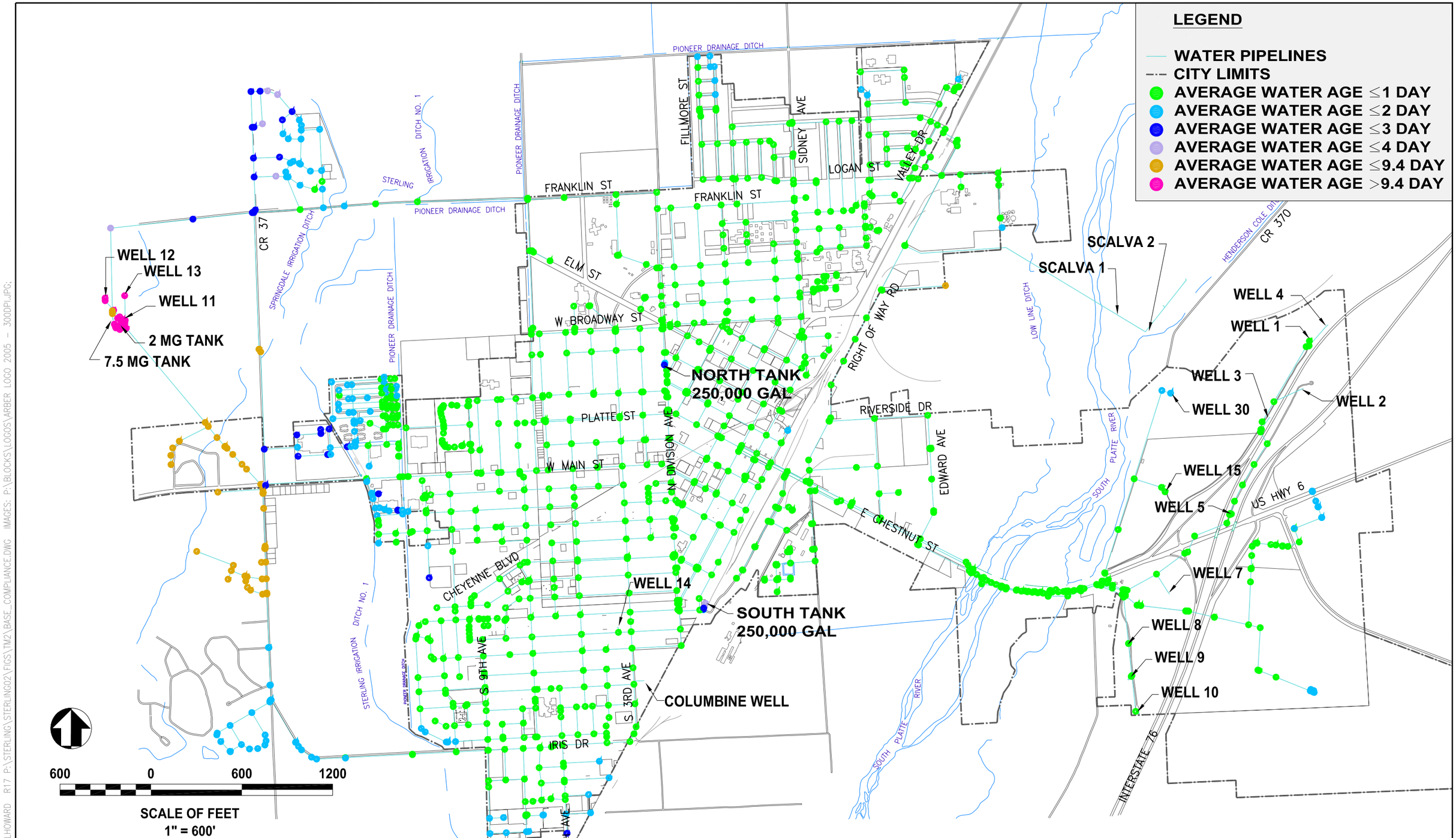

Arber
Water, Wastewater & Reuse Engineers
Richard P. Arber Associates
198 Union Boulevard, Suite 200
Lakewood, Colorado 80228
Website: www.arber.com
Phone: 303.831.4700
Fax: 303.831.0290

FIGURE 2
CITY OF STERLING
WATER AGE – EXISTING CONDITIONS

12/19/08 11:30 LHOWARD R17 P:\STERLING\STERLING02\FIGS\TM2\BASE_COMPLIANCE.DWG IMAGES: P:\BLOCKS\LOGOS\ARBER LOGO 2005 – 300DPI.JPG;

- Hydraulic modeling of the water system indicates that by taking the 2.0 MG tank off-line, water age is significantly reduced. With the 2.0 MG tank off-line, the water age on the far western side of the city is reduced to 2.0 days (a decrease of 7.4 days). Taking the 2.0 MG tank off-line does not significantly reduce the water age in the residential areas in the central parts of the city. Figure 3 illustrates the average water age in the distribution system with the 2.0 MG tank off-line.
- Fire flow storage for the most conservative fire (8,000 gpm for 4 hours) is 1.9 MG. Assuming this fire occurred during a peak hour demand of 10.2 mgd, all of the tanks were at low levels (South Tank at 18 feet), and the 2.0 MG tank was off-line, the remaining storage in the system after the 4 hour fire would be 1.5 MG (assuming wells 1, 2, 4, 5, 7, 8, 9, and 15 were producing). It should be noted that when the tank level falls below 18 feet, additional wells can be called to run.
- Hydraulic modeling of the water system indicates the water age discharged from the water storage tanks fluctuates more if the tanks are not mixed. This is attributed to the development of a stagnant zone in the upper areas of the tanks, which is discharged only during higher demands such as early morning and evening. The average water age remains generally unchanged; however, the peak demands result in higher maximum water ages within the distribution system.
- Chlorine dosage is limited to 2 milligrams per liter (mg/L). The chlorine residual in the system on the far west side of the City is between 0.1 mg/L and 0.2 mg/L depending on the first order reaction rate used in the model.

The following presents proposed changes to the water system operation:

1. Changes in the order of operation of the wells to reduce the uranium concentrations in the system during the average day demand are being implemented as part of the interim improvements. Wells with the lowest TOC and uranium levels are called to run first.
2. A reduction in the volume of water stored from approximately 10.0 MG to 8.0 MG is recommended. This can be achieved through disconnecting the 2.0 MG tank from the water system. The 2.0 MG tank is located on the west side of the City.
3. Installation of a tank mixing system for the 7.5 MG tank is recommended. Systems such as the Solar Bee Model SB 5000v 12PV, or the Red Valve Tideflex mixing system will increase tank mixing, thus resulting in lower water age. These systems may provide the greatest amount of benefit, while minimizing costs. Information on these two systems is included in Appendix B.

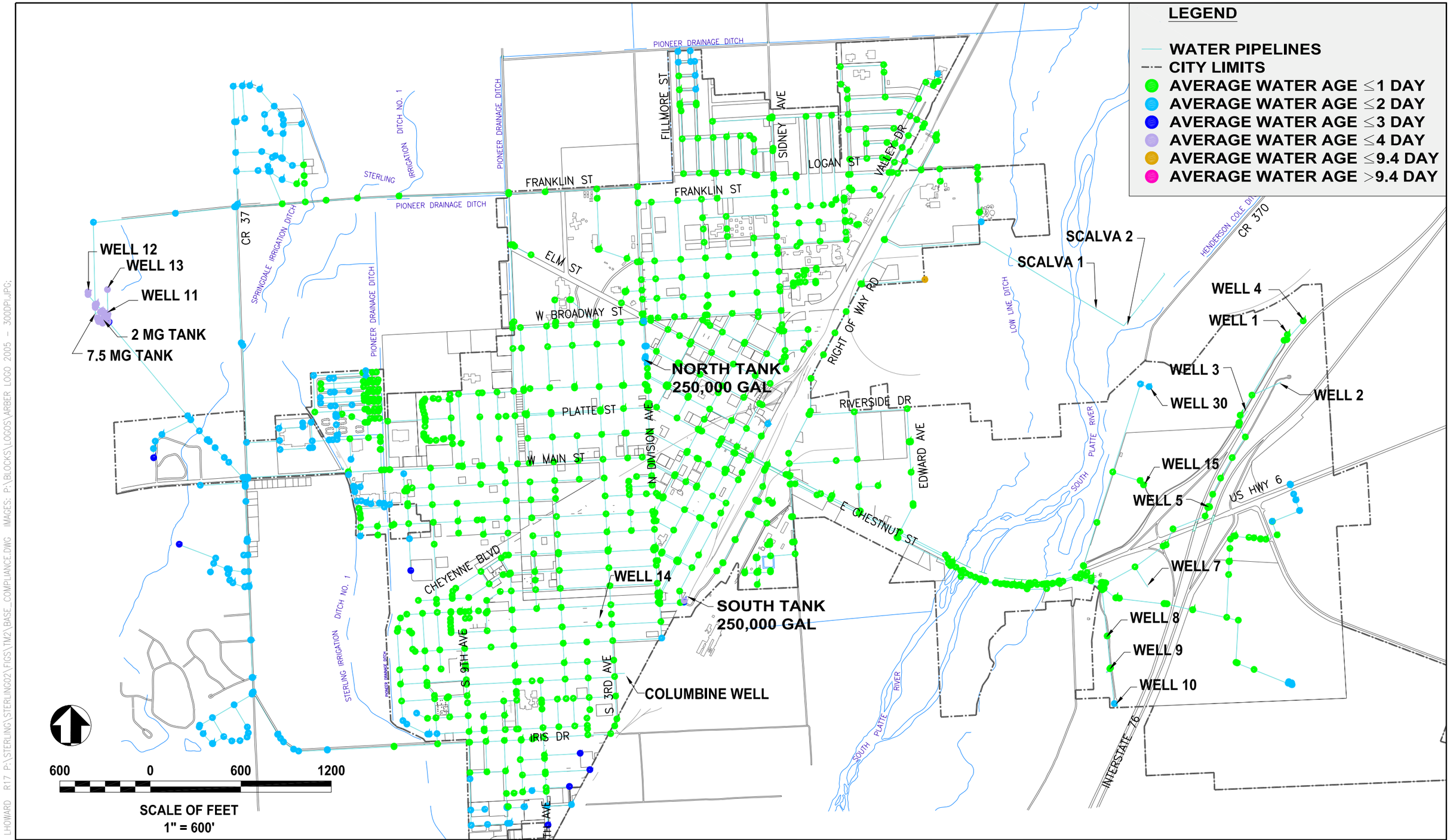

Arber
Water, Wastewater & Reuse Engineers
Richard P. Arber Associates
198 Union Boulevard, Suite 200
Lakewood, Colorado 80228
Website: www.arber.com
Phone: 303.831.4700
Fax: 303.831.0290

FIGURE 3
CITY OF STERLING
WATER AGE - 2.0 MG TANK OFF-LINE

12/19/08 11:30 LHOWARD R17 P:\STERLING\STERLING02\FIGS\TM2\BASE_COMPLIANCE.DWG IMAGES: P:\BLOCKS\LOGOS\ARBER LOGO 2005 - 300DPI.JPG;

The following section presents the proposed implementation plan for the City's water supply system.

IMPLEMENTATION

As identified previously, the system is currently in compliance with the drinking water standard of 80 μg/L for TTHM. The proposed changes to the water system will be implemented sequentially. If increased TTHM levels are observed, the next change in the sequence will be implemented. The implementation sequence of the proposed changes will occur as follows:

1. Change the order of operation of the wells. Changes in well operation are believed to have reduced the TTHM level, which is below 80 μg/L.
2. Programming changes in the SCADA system will be implemented to optimize the order of operation of the wells.
3. The 2.0 MG tank will be taken off line to reduce the maximum water age within the distribution system.
4. A mixing system will be installed on the 7.5 MG tank to reduce the maximum water age within the distribution system.

The order of operation of the wells has been implemented through programming changes in the SCADA system. A new SCADA system will be implemented by Sterling starting in November 2008. The changes will be completed in December 2008 or January 2009. The new SCADA system will provide automatic operation for more than two tank level set points.

To preserve fire fighting capabilities and in the event of a transmission line break, Sterling has determined that the 2.0 MG tank should remain part of the system. Sterling will continue to monitor for TTHM, and if the TTHM level approaches 80 μg/L, the tank will be taken offline. CDPHE should advise if this action is appropriate.

Research of a mixing system for the 7.5 MG tank will continue. Sterling will continue to monitor for TTHM, and if the TTHM level approaches 80 μg/L, a mixing system will be installed. CDPHE should advise if this action is appropriate.

T:\PROJECTS---CLIENTS\STERLING\STRLNG02\1-PREDESIGN\COMMUNICATIONS\TECHNICAL MEMOS\TM 2 DBPS\FINAL TM 2\TECHNICAL MEMORANDUM NO 2 - DBP_FINAL 12-23-08.DOC

APPENDIX A

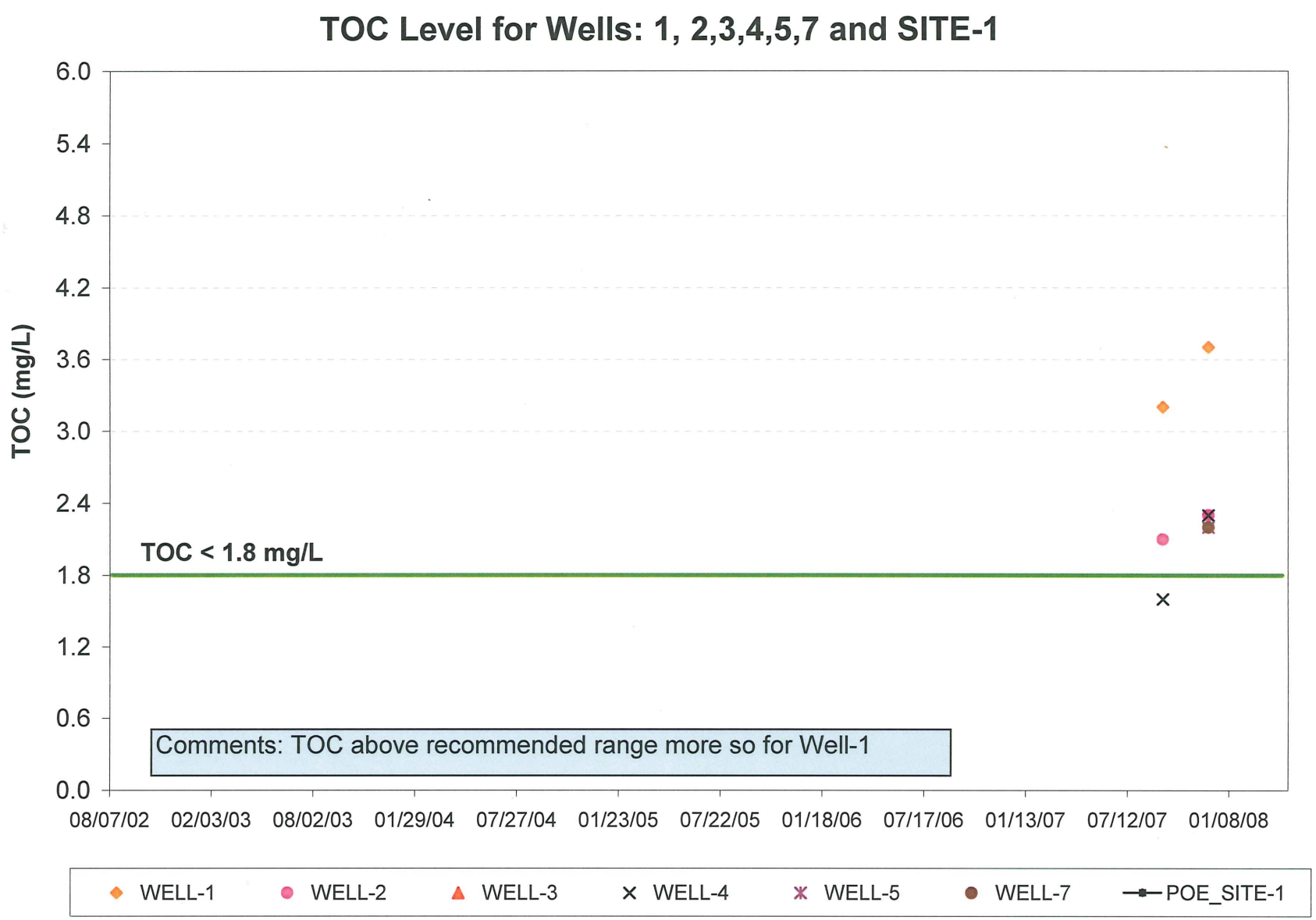
TOC Level for Wells: 1, 2,3,4,5,7 and SITE-1
TOC (mg/L)
6.0
5.4
4.8
4.2
3.6
3.0
2.4
1.8
1.2
0.6
0.0
TOC < 1.8 mg/L
Comments: TOC above recommended range more so for Well-1
08/07/02
02/03/03
08/02/03
01/29/04
07/27/04
01/23/05
07/22/05
01/18/06
07/17/06
01/13/07
07/12/07
01/08/08
WELL-1
WELL-2
WELL-3
WELL-4
WELL-5
WELL-7
POE_SITE-1

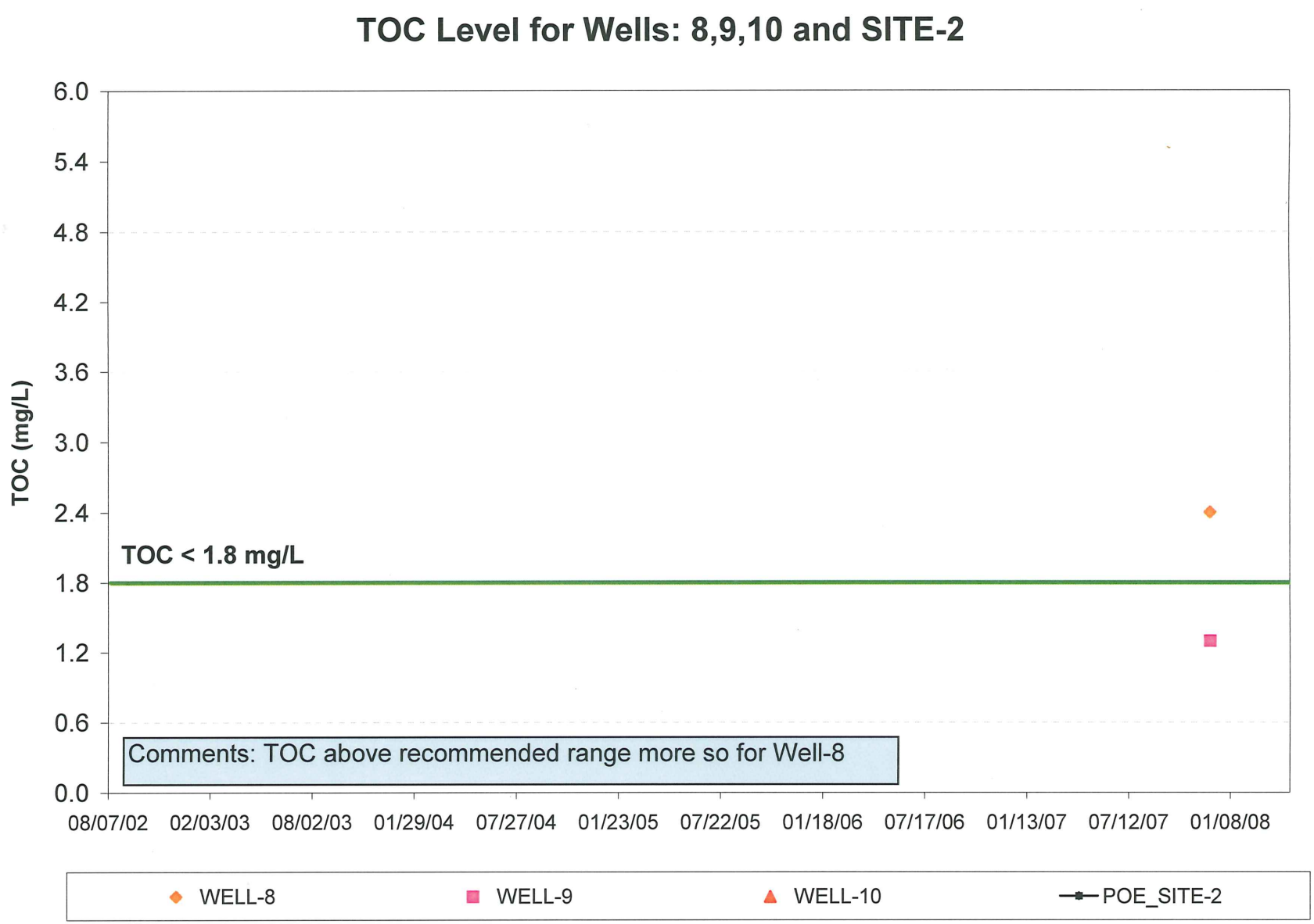
TOC Level for Wells: 8,9,10 and SITE-2
TOC (mg/L)
6.0
5.4
4.8
4.2
3.6
3.0
2.4
1.8
1.2
0.6
0.0
TOC < 1.8 mg/L
Comments: TOC above recommended range more so for Well-8
08/07/02
02/03/03
08/02/03
01/29/04
07/27/04
01/23/05
07/22/05
01/18/06
07/17/06
01/13/07
07/12/07
01/08/08
WELL-8
WELL-9
WELL-10
POE_SITE-2

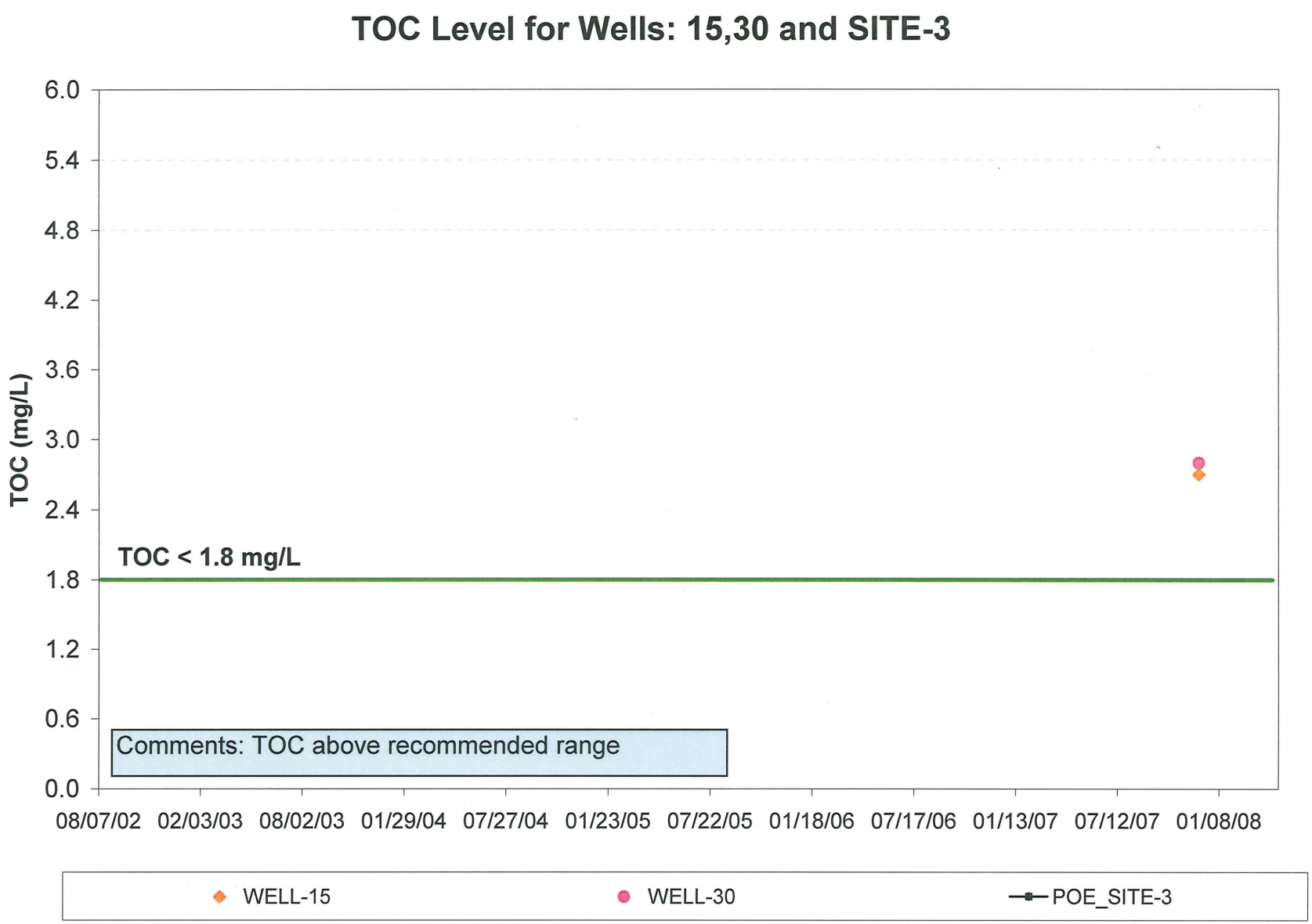
TOC Level for Wells: 15,30 and SITE-3
TOC (mg/L)
6.0
5.4
4.8
4.2
3.6
3.0
2.4
1.8
1.2
0.6
0.0
TOC < 1.8 mg/L
Comments: TOC above recommended range
08/07/02
02/03/03
08/02/03
01/29/04
07/27/04
01/23/05
07/22/05
01/18/06
07/17/06
01/13/07
07/12/07
01/08/08
WELL-15
WELL-30
POE_SITE-3

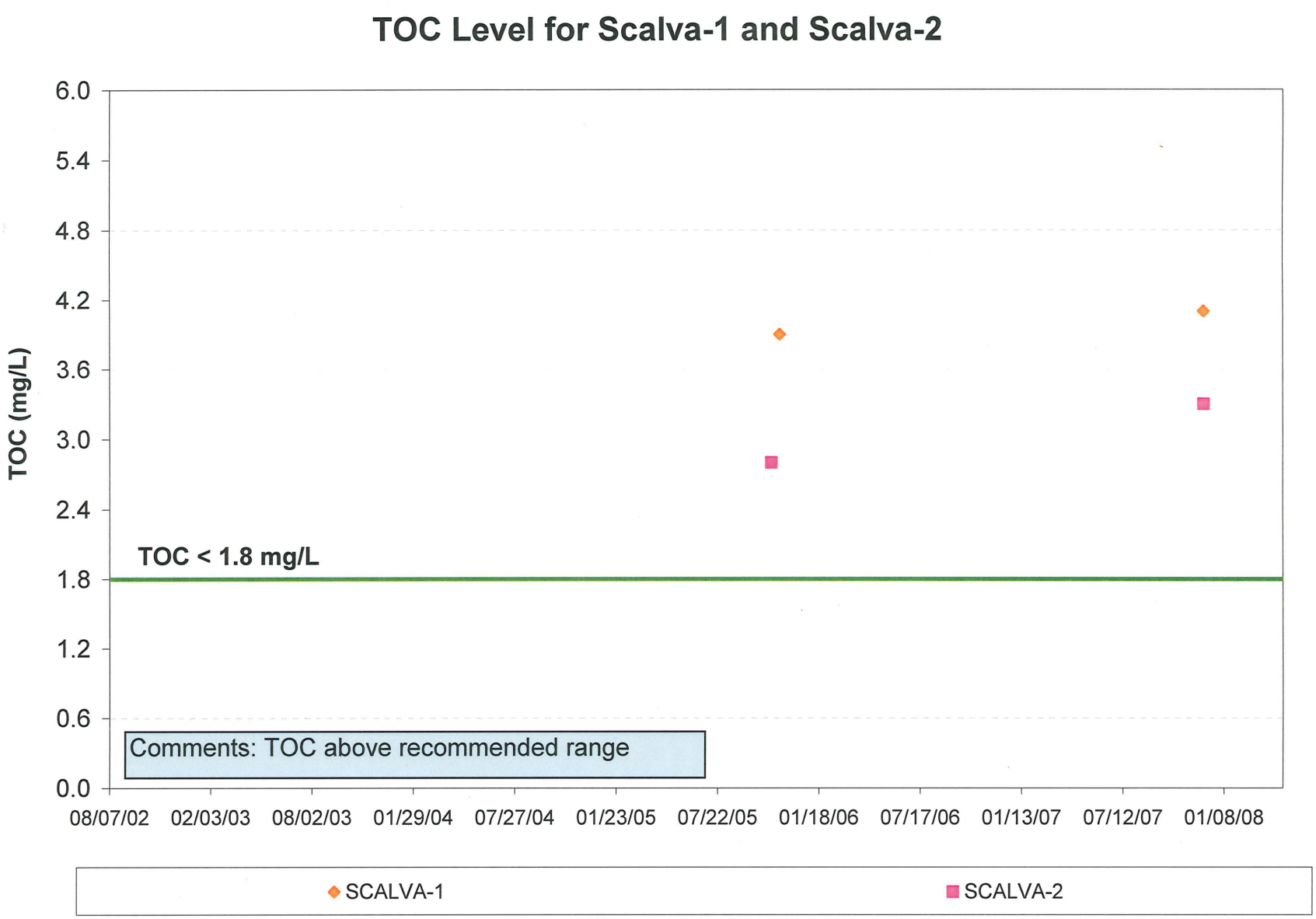
TOC Level for Scalva-1 and Scalva-2
TOC (mg/L)
6.0
5.4
4.8
4.2
3.6
3.0
2.4
1.8
1.2
0.6
0.0
TOC < 1.8 mg/L
Comments: TOC above recommended range
08/07/02
02/03/03
08/02/03
01/29/04
07/27/04
01/23/05
07/22/05
01/18/06
07/17/06
01/13/07
07/12/07
01/08/08
SCALVA-1
SCALVA-2

APPENDIX B

SolarBee®

Circulating the World's Water

http://www.solarbee.com

SOLARBEE PROPOSAL

Potable Application

Prepared for City of Sterling

Prepared by the Application Engineering and Sales Departments of SolarBee, Inc.

SolarBee®
Circulating the World's Water
http://www.solarbee.com

SolarBee Regional Office - Harvey Hibl
11867 Bradburn Blvd, Westminster, CO 80031
(877) 469-4001 (303) 469-4001 Fax (303) 469-4701

SolarBee, Inc. Main Office and Service Center
3225 Highway 22, Dickinson, ND 58601-9419
(866) 437-8076 (701) 225-4495 Fax (701) 225-0002

BUDGET ESTIMATE

Date: December 9, 2008

To: Rob Demis
Richard P. Arber Associates, Inc.
198 Union Boulevard, Suite 200
Denver, CO 80228

From: Harvey Hibl - SolarBee Regional Manager

1. PROJECT DESCRIPTION

1.1 Facility or Reservoir Name.
Sterling Tank

1.2 Address or Location of Facility or Reservoir.
Sterling, CO

1.3 Description of Reservoir.
7.5MG, above ground, round tank.

1.4 SolarBee Objectives, the Problems to Solve:
Potable Water:
Provide complete mixing throughout the tank or reservoir to reduce stagnant water conditions and provide a complete circulation of a full tank or reservoir in less than two days. Also, by complete mixing, allow for representative sampling for total chlorine monitoring and provide the means via the fast response early boost (FREB) fluid intake assembly to inject sodium hypochlorite for boosting chlorine residual or breakpoint chlorination.

1.5 Quantity of SolarBees Recommended, Brief Description of Features and Recommended Deployment Method:

We recommend installation of one (1) SB5000v12PW machine.

SB5000v12PW: 5,000 gpm (7.2 MGD) total flow leaving the machine in full sunlight, 316 stainless steel and non-corrosion polymer construction, 25-year life high efficiency brush-less electric motor design that provides day and night operation with a solar charged battery power system, digital control system for intelligent power management specific to this application, SCADA outputs, three 80 watt solar panels and control box mounted on a 316SS pedestal, 16" diameter X 30' maximum length fluid intake hose, fast response early boost (FREB) fluid intake assembly. NOTE: (A) This model can be installed into a hatch with 36" X 36" minimum unobstructed clearance, (B) Customer to provide a crane during installation and (C) Model comes with a 2-year warranty as described in the owners manual.

NSF

NSF/ANSI Std 61

SolarBee equipment has this NSF symbol, which is required by many states.

(Please see attached summary specification sheet and drawing for this machine.)

Factory Delivery, Onsite Final Assembly, Startup: SolarBee, Inc. sends a team of up to 4 trained factory representatives to perform these functions, and to train the customer's personnel on operation and maintenance of the SolarBees. The teams are trained to meet confined space, over water and at elevation safety requirements. Special safety equipment is utilized and special safety procedures are followed to meet all OSHA safety requirements.

2. PURCHASE COST

Quantity	Equipment Description	Purchase Cost Each **	Purchase Cost Total
1	SB5000v12PW machine per above	$ 42,105.00	$ 42,105.00
Other Accessories:			
1	Supplemental Grid Power Kit	$ 2,305.00	$ 2,305.00
		Equipment Subtotal	**$ 44,410.00**
	Sales or other taxes, if applicable		to be determined
1	Delivery, on-site final assembly, startup (cost per machine)	$ 7,825.00	$ 7,825.00
		OPTION 1, TOTAL INVESTMENT	**$ 52,235.00 (+ taxes)**

** These are 2008 prices. Due to the material cost increases in 2008, the prices for 2009 could be up to 10% higher.

2.1 Cost to have Equipment Delivered, On-site Final Assembly and Startup.
Delivery, on-site final assembly and startup cost on all of the above quoted equipment is presented above. If less than all of the above machines are purchased then delivery, on-site final assembly and startup costs per machine will be higher than the figure shown above. Please call for the exact cost.

2.2 Lease-Purchases Are Available.
Some cities prefer to purchase SolarBees on a lease-purchase basis to spread the cost out over several budget cycles. Wells Fargo Bank, Government Leasing, and other firms would be pleased to finance this purchase. Typical terms include a low interest rate, 3 or 5 or 7 year financing, no down payment, monthly or annual payments, no prepayment penalties, and a small buyout at the end of the lease. If interested, SolarBee will put you in touch with several financing firms.

	Purchase Value	Years	Interest Rate	Estimated Payment	
Example	$ 52,235	5	5.00%	~ $ 1,005	per month

2.3 Incentives for Purchasing Solar Powered Equipment.
You may want to check with your state for other possible incentives for purchasing solar powered equipment through the Renewable Portfolio Program for your state and with your power company for rebate information when displacing the need for power from the grid. Please contact SolarBee Regional Manager Harvey Hibl at 877-469-4001 for the links to various sites that may apply to you.

3. ADDITIONAL PROVISIONS

3.1 This is a Budget Estimate, please call for a firm Quotation.

3.2 Budget Estimate Validity Term.
This budget estimate replaces all prior budget estimates for this project. It is valid until replaced by a subsequent budget estimate, or else for 60 days, whichever occurs first.

CANADIAN PATENT NUMBER: 2,409,009

UNITED STATES PATENT NUMBER: 7,104,279

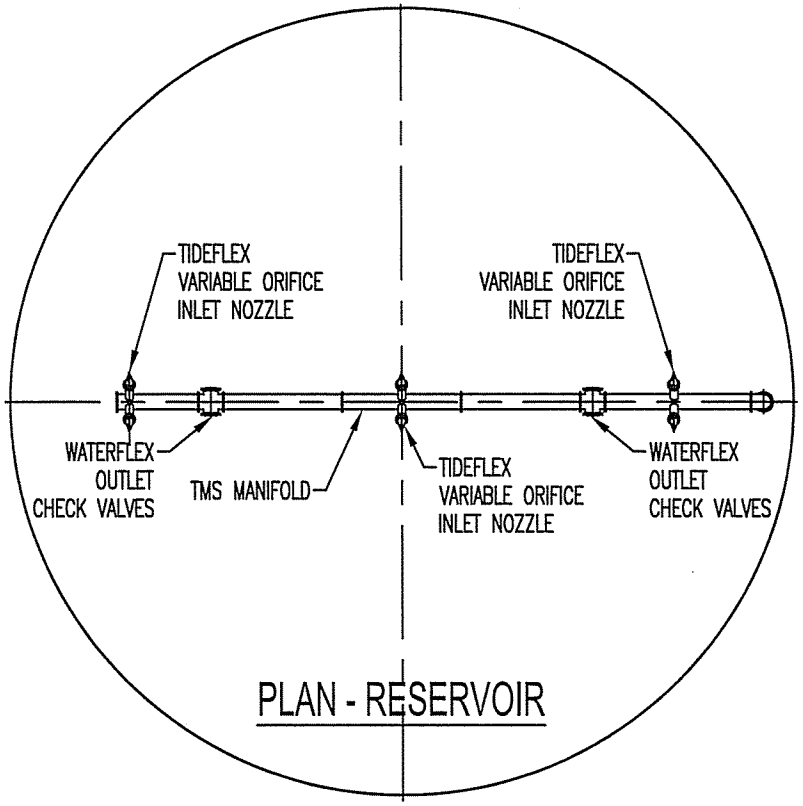

PLAN - RESERVOIR

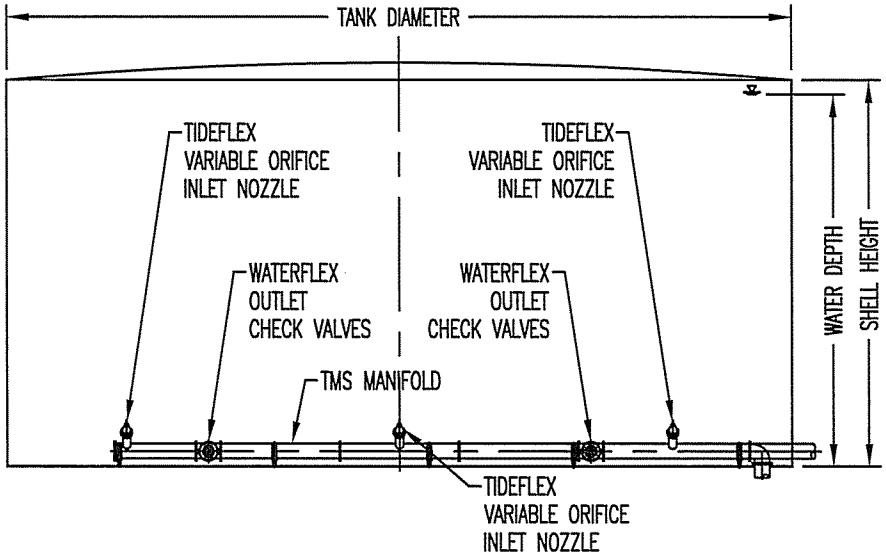

ELEVATION - RESERVOIR

FINAL MIXING SYSTEM DESIGN AND ALL SUPPORTING CALCULATIONS TO BE SUPPLIED BY RED VALVE COMPANY

NOTES:

1. DO NOT USE THIS DRAWING FOR CONSTRUCTION. DRAWING INTENDED AS A GENERAL REPRESENTATION ONLY.
2. QUANTITY, SIZE, ELEVATIONS, LOCATIONS, AND DISCHARGE ANGLES OF TIDEFLEX INLET NOZZLES AND/ OR OUTLET CHECK VALVES ARE TANK-SPECIFIC BASED ON HYDRAULICS, MIXING AND TURNOVER CRITERIA.
3. CARBON AND STAINLESS PIPE SECTIONS MAY BE SUPPLIED WITH PLAIN ENDS TO BE BUTT WELDED IN THE FIELD.

THE DESIGN INFORMATION WITHIN THESE DOCUMENTS IS THE INTELLECTUAL PROPERTY OF RED VALVE COMPANY/TIDEFLEX TECHNOLOGIES. THESE DOCUMENTS SHALL NOT BE USED TO CONSTRUCT DUPLICATE SYSTEMS; USE OF THESE DOCUMENTS AND/OR CONSTRUCTION OF DUPLICATE SYSTEMS SHALL VIOLATE THE COPYRIGHT AND PATENT PROTECTION LAWS ASSOCIATED WITH THIS PATENTED PRODUCT. THESE DOCUMENTS SHALL REMAIN THE PROPERTY OF RED VALVE COMPANY/TIDEFLEX TECHNOLOGIES AND ARE DISTRIBUTED FOR THE SOLE PURPOSE OF COORDINATING THE INSTALLATION OF THE SYSTEM(S) PROVIDED BY RED VALVE COMPANY / TIDEFLEX TECHNOLOGIES.

S.O.#: QUOTE #:

NOT FOR CONSTRUCTION

REV	BY	DATE	DESCRIPTION
A			

Tideflex® Technologies
A Division of Red Valve Company, Inc.

TIDEFLEX TECHNOLOGIES
TIDEFLEX MIXING SYSTEM
700 N. BELL AVENUE
CARNEGIE, PA 15106 USA
PHONE: 412-279-0044
FAX: 412-279-5410
WEBSITE: WWW.TIDEFLEX.COM
EMAIL: INFO@TIDEFLEX.COM

TMS GENERAL ARRANGEMENT FOR GROUND LEVEL CIRCULAR RESERVOIRS

CONSULTANT:

APPLICATION: (TMS) TIDEFLEX MIXING SYSTEM

SCALE: FULL PLOT:

DWG. BY: MJD DATE: 12/13/02

DWG. NO. TMS-CIR12

SHEET 1 OF 1

ryan walsh

From: Kirt Lecocq [klecocq@tideflex.com]
Sent: Thursday, December 18, 2008 2:51 PM
To: rwalsh@arber.com
Cc: Chris Mitchell (E-mail); Buddy Alford (E-mail)
Subject: QUOTE: 7.5MG RESERVOIR - STERLING, CO

Importance: High

Ryan,

For the subject project, the price for one (1) Ductile Iron TMS Mixing System is: $91,221.00. This price includes the following:

Ductile Iron, Double Cement-Lined, Flanged Pipe and Fittings with NSF-61 Primer on the Exterior Carbon Steel Studded Flange Ring
(11) Carbon Steel Pipe Supports
Lot of 304 Stainless Steel Mounting Hardware (Nuts, Bolts, and Washers) with Gaskets
Tideflex Inlet and Outlet Check Valves Everything to make a complete and operable system when attached to the customer's inlet pipe in the reservoir

A hard copy of this email quote will follow, shortly. I will have a stainless steel quote to you shortly.

If you have any questions, please call or email me.

Best regards,

Kirt G. Lecocq
Tideflex Technologies
Division of Red Valve Co., Inc.
600 N. Bell Avenue
Carnegie, PA 15106 USA
Phone: 412/279-0044
Fax: 412/279-5410
Email: klecocq@tideflex.com

Tideflex Technologies Division Of Red Valve Co., Inc. Is Pleased To Announce The Receipt Of Patent For:

Tideflex Mixing System (TMS)

United States Patent Number: 7,104,279

Canadian Patent No. 2,409,009

Patent Title: "Method And Apparatus For Preventing Stagnation In Fluid Reservoirs"

We Welcome You To View The Contents Of Our Patent By Visiting The United

States Patent And Trademark Office Website At www.uspto.gov

< <http://www.uspto.gov>> And To Contact Us If You Have Any Questions at(412)279-0044

DRAFT
TECHNICAL MEMORANDUM NO. 3

TO: Joseph Kiolbasa, P.E., City Manager, City of Sterling
FROM: Mark Beebe, P.E., Richard P. Arber Associates
Rob Demis, P.E., Richard P. Arber Associates
Marinda Morris, Richard P. Arber Associates
DATE: December 16, 2008
JOB NO.: STRLNG02
SUBJECT: Sterling Water Treatment System
Consumer Cost Impact for Centralized Advanced Water Treatment for Secondary Standards

PURPOSE

The City of Sterling has undertaken a project to address exceedances of Primary National Drinking Water Standards for Uranium and disinfection by-products (DBP). This analysis has been completed to compare the economic impact of providing additional treatment to address secondary water quality standards for the City's water supply.

BACKGROUND

Primary standards are established by the Environmental Protection Agency (EPA) for contaminants that have human health effects. These standards must be met by all public water systems.

Secondary standards, also established by the EPA are for constituents that influence the aesthetics of water, such as taste and odor. Secondary standards are not enforceable. Currently, water systems are not required to meet secondary drinking water standards, but it is considered good practice to do so. At some point in the future, secondary water quality standards may become primary standards. This analysis was prepared to determine the economic feasibility of providing additional treatment to address secondary water quality standards including total dissolved solids (TDS), hardness and sulfates.

The quality of the City's water as compared to generally accepted maximum values for several key parameters is presented in Table 1-1.

Table 1-1: Water Quality Comparison

Parameter	City Water		Accepted Values	SMCL(2)
	Range(1)	Typical Value		
Hardness (mg/L of $CaCO_3$)	208-494	335	50-150	None
Sulfate (mg/L)	0.4-638	280	250	250
TOC (mg/L)	1.3-3.7	2.6	1.8-2.2	None(3)
Total Dissolved Solids (mg/L)	359-1350	1122	500	500

(1) Ranges includes water quality characteristics from the East Well Field and the West Well Field
(2) SMCL is National Drinking Water Standard for Secondary Maximum Contaminant Level
(3) National Primary Drinking Water Standard as part of Stage 1 Disinfectants and Disinfection Byproducts, treatment technique removal ratio.

The Colorado Department of Public Health and Environment (CDPHE) has issued an enforcement order to the City of Sterling requiring the City to comply with the National Drinking Water Standards for primary water quality. The enforcement order and public notification have increased the public's awareness of contaminants in the drinking water supply. New treatment facilities will be capable of meeting the primary drinking water quality standards. Taste, odor and excessive water hardness, clogging pipes, premature failure of plumbing facilities, premature appliance failure and other problems will still be issues for residents if the treatment for only the primary standards is performed. It is assumed that residents will address these issues in the home. To reduce the issues associated with the secondary contaminants, it is estimated that up to 50% of the homes on the water system will have in-home water treatment units including ion exchange (IE) and reverse osmosis (RO) water softeners. It is also assumed that 25% of the population is purchasing bottled water for drinking and cooking. The remaining 25% of the population is assumed to use neither in-home treatment nor bottled water.

EVALUATION

Additional treatment using RO will produce water with TDS and hardness lower than what is desirable for normal domestic use. The RO permeate will have TDS between 50 to 100 mg/L.

This can be blended with filtered water to produce the desired water quality with 500 mg/L or less of TDS.

From water use records, an average capacity of 3.4 mgd will be required to meet the system demand. Preliminary design indicates that an average day RO treatment capacity of 2.24 mgd blended with 1.16 mgd of filtered water will produce the needed 3.4 mgd average day system demand. This results in an approximate 65/35 percent blend that can be adjusted depending on the desired water quality.

Two alternatives for water treatment were analyzed. The two alternatives are:

1. Construction of a new water treatment plant to address primary contaminants only. Coagulation-filtration can be used to meet the primary standards and was used for this analysis.
2. Construction of a new water treatment plant and additional treatment to address both primary and secondary contaminants. For this analysis, RO was used to provide treatment for a portion of the filtered water.

The two alternatives identified above represent a range of treatment techniques. Coagulation-filtration represents a treatment technique that is suitable for removing uranium from the water and provides some removal of TOC to reduce DBP's to meet the primary standards. This treatment technique will provide little or no removal to meet secondary standards. To provide removal of TOC to a level that will maintain safe levels of DBP formation, higher coagulation doses or additional treatment techniques such as biological filters or granular activated carbon (GAC) adsorption may be required. If treatment for hardness is desired, ion exchange could be added to coagulation-filtration. Additional treatment requires a higher initial capital cost and a higher operation and maintenance (O&M) cost.

The use of RO for treatment represents the higher end of treatment to meet primary and secondary standards. This treatment technique has the highest construction cost and highest

O&M cost. Using these two alternatives provides a range of cost for what is anticipated to be the lowest and highest costs for the system.

Costs common to both alternatives were not included in the analysis. For example, the costs of well and distribution system maintenance are common to both alternatives and therefore not included.

The cost of additional treatment, including capital and O&M costs will be defrayed in part by an improvement in water quality. For example, Alternative 1 would still require domestic users to install and maintain in-home treatment systems to remove hardness from their water. Alternative 2 would eliminate the need for in-home treatment.

To determine the economic effect on the end user, the present worth of both alternatives was developed. Present worth, as used herein, is defined as the amount of money which if deposited now in an interest bearing account would be sufficient, drawing on the principal and earned interest, to pay the series of annual costs over the 20-year period. A discount rate of 4% and an inflation rate of 4% were used for investigation of present worth. Costs presented are relative only and are for comparative purposes.

The following items were identified for offsetting the cost of additional treatment for Alternative 2:

1. **In-Home Treatment:** There are approximately 13,900 residents in Sterling, with an average of 2.8 residents per household, resulting in an estimated 4,965 domestic service connections. It is anticipated that 50% of these homes have in-home treatment systems. In-home treatment includes a $400 fee for equipment installation and a $60 per month rental fee. Operation and maintenance costs for the in-home treatment equipment are included in the $60 per month rental fee. This gives an average cost of $62 per month per dwelling unit over the 20-year period. At an average cost of $62 per month, in-home

treatment results in a total cost of $1.85 million per year. The present worth of this cost as defined above for a 20-year period is $37 million.

2. **Bottled Water:** It is anticipated that 25% of residents purchase bottled water for drinking and cooking purposes. Residents consume an estimated 1 gallon per day per person for drinking and cooking purposes. At an average cost for bottled water of $2.00 per gallon, the average monthly cost per household for bottled water is $170. The annual cost of bottled water is $2.5 million.

   With the additional treatment, taste, odor and hardness of the water will be improved. Half of the people using bottled water are assumed to stop, and use the tap water. It is assumed that those continuing to use bottled water will use tap water for cooking (2 QT per day) and continue to use bottled water for drinking water (2 QT per day). The annual avoided cost of bottled water after treatment for taste, odor and hardness is $1.91 million. The present worth of the cost savings for 20 years is $38.1 million.

3. **Hot Water Heaters:** The current life of hot water heaters in Sterling is approximately 7 years without in-home treatment. In-home treatment may extend water heater life to 10 years. The anticipated life of a water heater using water from Alternative 2 is 15 years. The average installed price of a hot water heater in Sterling is $600. An annual savings of $163,000 per year could be realized using Alternative 2. The present worth for 20 years is $3.3 million.

4. **Plumbing Fixtures:** The cost of repair and replacement of plumbing fixtures on a 6-year replacement cycle due to hard water is estimated to be $65 per year per dwelling unit or $161,000 per year. The present worth of this cost over 20 years is $3.2 million.

5. **Home Appliances:** It is assumed that 60% of the homes have clothes washing machines and 60% have dishwashers. Repairs to pumps and valves on these machines due to water with high hardness are probably needed about every four years. The cost per repair is

approximately $30 per year, per machine. This is an annual cost of $89,000 and a 20-year present worth of $1.8 million.

The total 20-year present worth of the avoided costs listed is approximately $83 million. Table 1-2 presents a summary of the present worth of the overall system costs, including estimates of the project cost for treatment facility construction and operation and maintenance using coagulation-filtration or reverse osmosis.

Table 1-2: Summary of Overall Costs

Treatment Process Cost Item	Alternative 1: Coagulation-Filtration (in million $)	Alternative 2: Reverse Osmosis (in million $)
Capital Cost (1)	$16	$24
O&M Costs over a 20 year period (2)	$30	$39
Hard Water Costs over a 20 year period (3)	$83	---
Membrane Replacement Cost (4)	---	$2
TOTAL	**$129**	**$65**

(1) Project Cost. This is an estimate used for comparison purposes only. Actual system configuration and size may significantly affect the project cost.
(2) Assuming O&M costs are $1.75/1000 gallons for RO and $1.20/1000 gallons for coagulation-filtration
(3) These are costs that will remain the same for the population without water quality produced by the RO system: in home treatment, bottled water, hot water tank replacement and maintenance, etc.
(4) Assumes membranes are replaced every 5 years, 6 mgd system, 1,000 membranes, $500/membrane

When comparing costs for the entire water system, the following can be determined from Table 1-2:

- The present worth of Alternative 2 is $64 million less than Alternative 1, indicating that the long-term economic benefit of a reverse osmosis central water treatment system to the water users is $64 million over a 20-year period.
- The initial project cost of RO treatment is higher than coagulation-filtration.
- The yearly operation and maintenance cost of RO is higher than coagulation-filtration. This is offset by the reduction in hard water treatment costs that are paid by the homeowner.

To determine the anticipated monthly impact that RO treatment may have for the residents of Sterling, additional analysis was performed. The following presents the anticipated monthly impacts:

1. **In-Home Treatment**. For homes having in-home treatment systems, the average cost per month per dwelling unit is $62.

2. **Bottled Water.** It is assumed that residents using bottled water for cooking (2 QT per day) will use tap water for cooking, but will continue using bottled water for drinking (2 QT per day). The average monthly cost per household for bottled water is $85.

3. **Hot Water Heaters.** In-home treatment may extend water heater life to 10 years. The anticipated life of a water heater using water from Alternative 2 is 15 years. When using Alternative 2 as the baseline (15 year life), the average monthly cost per household is $1.70 to replace the hot water heater for those with in-home treatment (10 year life) and $3.80 per month for those with no in-home treatment (7 year life).

4. **Plumbing Fixtures.** The cost of repair and replacement of plumbing fixtures on a 6-year replacement cycle due to hard water is estimated to be $65 per year per dwelling unit. When using Alternative 2 as the baseline, the average monthly cost per household would be $2.70 per month for those with in-home treatment and $5.40 per month for those with no in-home treatment.

5. **Home Appliances.** Repairs to pumps and valves on washing machines and dishwashers due to water with high hardness are probably needed about every four years. The cost per repair is approximately $30 per year, per machine. When using Alternative 2 as the baseline, the average monthly cost per household would be $2.50 per month for those with in-home treatment and $5.00 per month for those with no treatment.

The average monthly costs per household are estimated in Table 1-3. In addition, estimates for the monthly cost of coagulation-filtration or RO for the consumer is also estimated in Table 1-3.

Table 1-3: Summary of Comparative Monthly Costs

Item ($ per month per home)	Homes With In-Home Treatment Systems and No Bottled Water Use		Homes Using Bottled Water and No In-Home Treatment		Homes Not Using In-Home Treatment or Bottled Water	
	Alternative 1 Centralized C-F Treatment	*Alternative 2 Centralized RO Treatment*	*Alternative 1 Centralized C-F Treatment*	*Alternative 2 Centralized RO Treatment*	*Alternative 1 Centralized C-F Treatment*	*Alternative 2 Centralized RO Treatment*
	Homes currently with In-Home Treatment	**Removal of In-Home Treatment System**	**Homes currently using Bottled Water for Drinking and Cooking**	**Homes that continue using Bottled Water for Drinking**	**Homes currently Not using In-Home Treatment or Bottled Water**	**No In-Home Treatment or Bottled Water**
In Home Treatment	$62	---	---	---	---	---
Bottled Water	---	---	$170	$85	---	---
Hot Water Tank	$1.70	---	$3.80	---	$3.80	---
Plumbing Fixtures	$2.70	---	$5.40	---	$5.40	---
Clothes/Dish Washer	$2.50	---	$5.00	---	$5.00	---
Monthly Cost for Coagulation-Filtration Treatment (1)	$44	---	$44	---	$44	---
Monthly Cost for RO Treatment (1)	---	$64	---	$64	---	$64
TOTAL	**$113**	**$64**	**$228**	**$149**	**$58**	**$64**

(1) These costs do not include current monthly costs for administration, storage, transmission, distribution and water acquisition fees.

(2) This is an estimate used for comparison purposes only and includes debt service cost and O&M costs at $1.75/1000 gallons for RO and $1.20/1000 gallons for coagulation-filtration (C-F).

When comparing cost for the individual home, the following can be determined from Table 1-3:

- Homes having in-home treatment that stop using in-home treatment will see a significant reduction in monthly costs with Alternative 2.
- Homes that continue to use bottled water for drinking but use tap water for cooking will see a reduction in monthly costs with Alternative 2.
- Homes that do not have in-home treatment or use bottled water will see an increase in monthly cost.

CONCLUSIONS

The long-term economic benefit of a reverse osmosis central water treatment system to the water users is approximately $64 million over a 20-year period. This economic benefit equals approximately $54 per month, per tap.

Homes that stop using in-home treatment or stop using bottled water will see the most significant reduction in monthly costs. Homes that do not have in-home treatment or use bottled water will see an increase in monthly cost.

There will be some less tangible benefits of additional treatment, such as the attraction of a good water supply that may create new industry and attract people considering relocating to Sterling.

The costs described above are associated with residential users only. Specific costs associated with commercial, institutional and industrial users would require additional data that will need to be developed in an engineering feasibility study. Although these additional costs could be significant, they are not necessary for this analysis to show a benefit to increased centralized water treatment.

MHB:RJD:MKM/mta

T:\PROJECTS---CLIENTS\STERLING\STRLNG02\1-PREDESIGN\COMMUNICATIONS\TECHNICAL MEMOS\TM 3 CONSUMER COST\DRAFT TECHNICAL MEMORANDUM NO 3 -COST ANALYSIS RO 12-11-08.DOC

DRAFT TECHNICAL MEMORANDUM NO. 4

TO: Joseph Kiolbasa, P.E., City Manager, City of Sterling
FROM: Rob Demis, P.E.
D. Ryan Walsh
DATE: December 19, 2008
JOB NO.: STRLNG02
SUBJECT: Sterling Water Treatment System
Site Selection Alternatives Evaluation

PURPOSE

The City of Sterling (City) is currently undertaking a water treatment plant (WTP) project to address exceedances of primary National Drinking Water Standards for Uranium and disinfection by-products (DBP). An analysis has been completed to evaluate two alternative sites for the WTP. This Technical Memorandum (TM) describes the site selection alternatives evaluation for the WTP.

BACKGROUND

The City is located approximately 120 miles northeast of Denver along Highway I-76, and is located adjacent to the South Platte River. Primary water uses in the City include residential, commercial, and industrial water use, as well as irrigation. The City water system serves a residential population of approximately 13,900 people, and approximately 4,570 service taps.

The City's water system is currently supplied by 15 wells as shown in Figure 1. The City recently has added two more wells (i.e., the Scalva Wells), which are not yet part of City's distribution system. The City intends to include these wells upon approval from the CDPHE. The City's existing wells have uranium concentrations that are near or above the drinking water standard of 30 μg/L. The running annual average for TTHM is near or above the drinking water standard of 80 μg/L.

There are two main well fields serving the City: the East Well Field located east of the City near highway I-76 with 11 wells, and the West Well Field located west of the City with 3 wells. One additional well is in the middle of the City. The City's wells are typically 60 to 100 feet deep.

The City water system has two pressure zones containing four water storage tanks. The main pressure zone serves the majority of the City with the exception of a small area on the east side of the City, which is served by the second pressure zone. Two ground level tanks are located in the West Well Field and have water storage volumes of 7.5 million gallons (MG) and 2.0 MG. Two elevated tanks are located within the City (North and South Tanks), and both have a water storage volume of 250,000 gallons each.

POTENTIAL PLANT SITES

There are two sites that the City has identified as potential locations for the new WTP. Both sites are owned by the City. The sites are hereinafter referred to as the North Site and the South Site as shown in Figure 1.

The North Site is located west of County Road 370, east of the South Platte River, and north of the Burlington Northern Railroad tracks with a total area of 1,060 acres as shown in Figure 2. The site is bounded on the west by land owned by the Division of Wildlife, and there are several private parcels of land on the eastern side of the site. The Scalva Wells are located in the southern portion of the site. If the WTP were to be constructed at the North Site, the ideal location would be the southern end of the site near the Scalva Wells.

The South Site is located west of County Road 370, east of the South Platte River, and north of Highway 6 with a total area of 102 acres as shown in Figure 3. The site is located just across County Road 370 from the Riverview Golf Course.

EVALUATION OF ALTERNATIVE PLANT SITES

Selection of the preferred water treatment plant site is based on many factors. The criteria used to evaluate the alternative plant sites are listed and explained below.

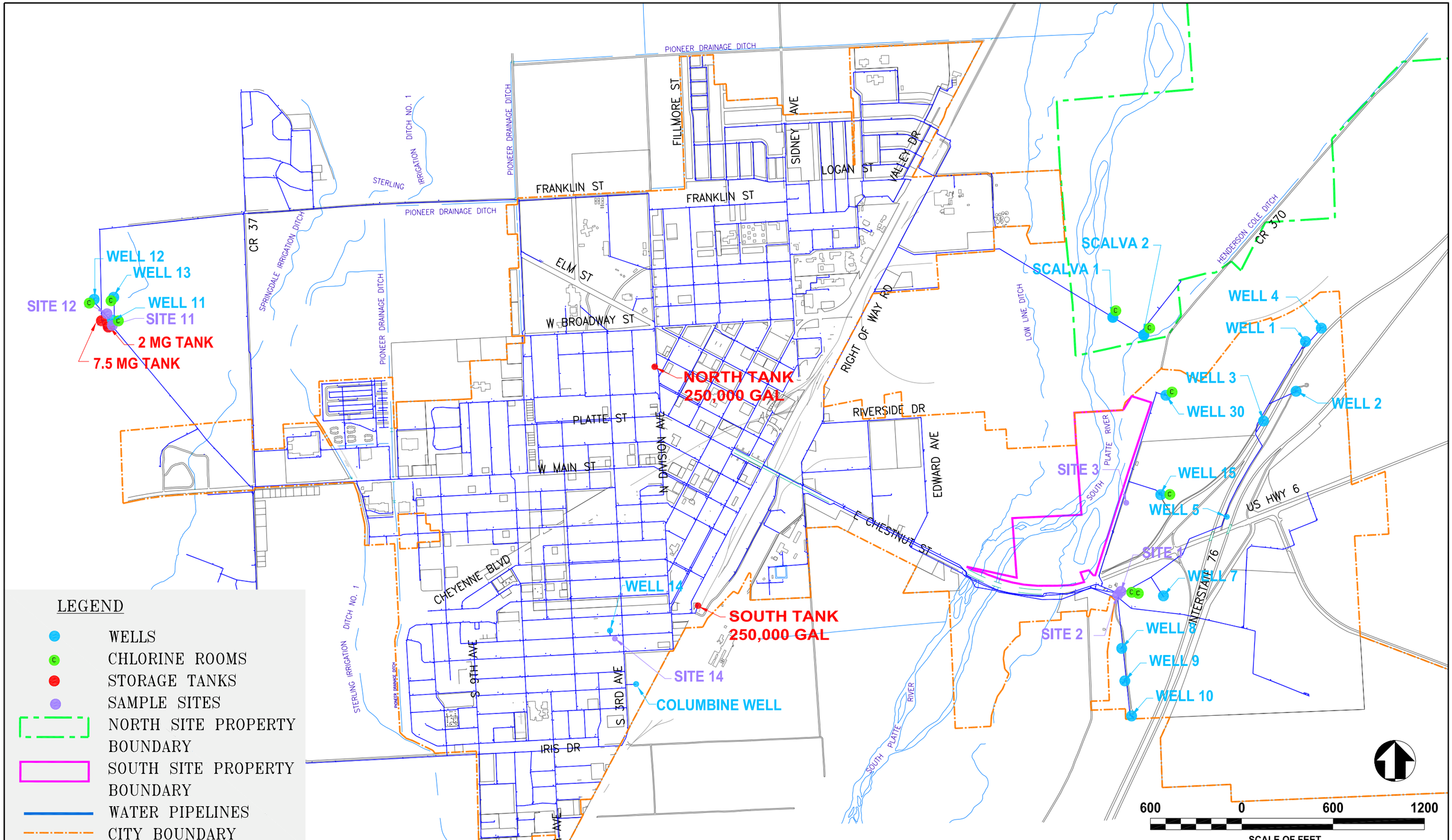

Arber
Water, Wastewater & Reuse Engineers

Richard P. Arber Associates
198 Union Boulevard, Suite 200
Lakewood, Colorado 80228

Website: www.arber.com
Phone: 303.831.4700
Fax: 303.831.0290

STERLING
A Colorado Treasure

FIGURE 1
CITY OF STERLING
EXISTING WATER SYSTEM

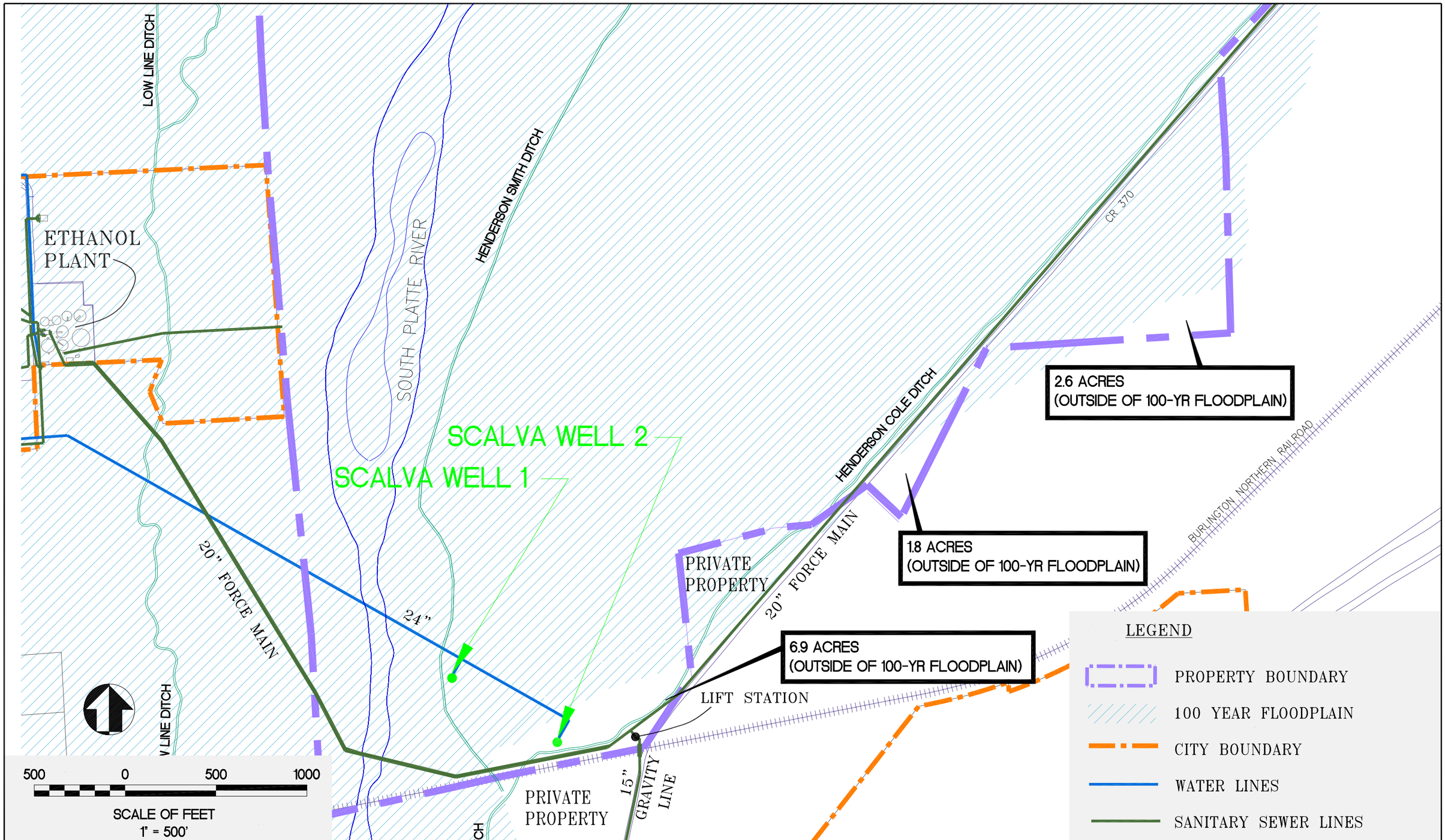

Arber
Water, Wastewater & Reuse Engineers
Richard P. Arber Associates
198 Union Boulevard, Suite 200
Lakewood, Colorado 80228
Website: www.arber.com
Phone: 303.831.4700
Fax: 303.831.0290

STERLING
A Colorado Treasure

FIGURE 2
CITY OF STERLING
NORTH SITE

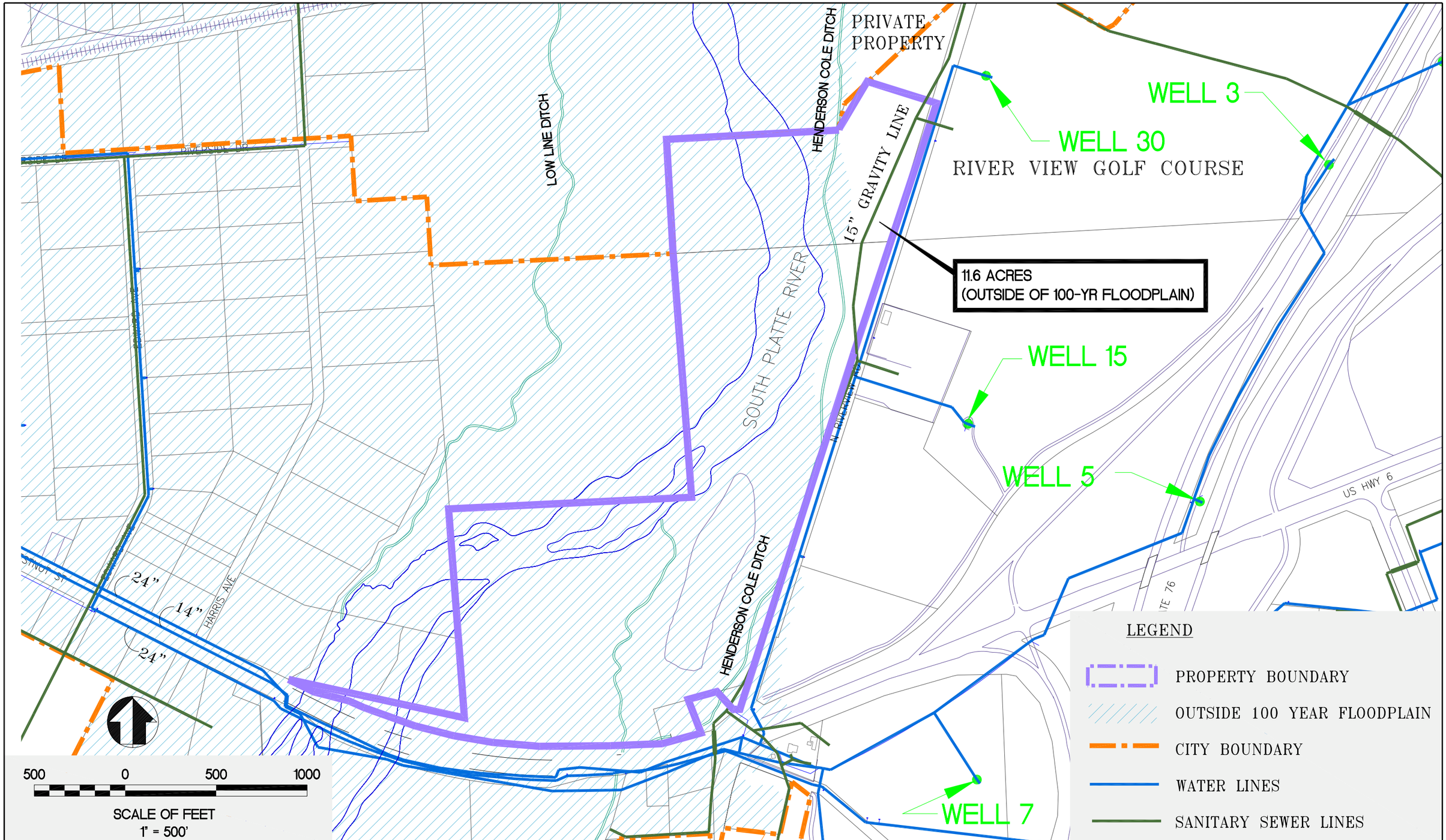

Arber
Water, Wastewater & Reuse Engineers
Richard P. Arber Associates
198 Union Boulevard, Suite 200
Lakewood, Colorado 80228
Website: www.arber.com
Phone: 303.831.4700
Fax: 303.831.0290

STERLING
A Colorado Treasure

FIGURE 3
CITY OF STERLING
SOUTH SITE

Adequate Size/Location Within Floodplain

It has been estimated that the footprint of the new WTP will be approximately 4.0 acres. This includes the building(s) housing the major treatment processes, ancillary site structures, and an access road around the facilities. The Colorado Department of Public Health and Environment (CDPHE) requires that the WTP be located outside of the 100-year floodplain.

North Site

The North Site has a total area of 1,060 acres with the majority of the land within the 100-year floodplain. There are three portions of land outside the 100-year floodplain. Two of the portions of land are 2.6 acres and 1.6 acres. These portions of land are not adequate for the new WTP. One of the portions of land outside the 100-year floodplain is 6.9 acres. This area, located on the south end of the site, is adequate for the new WTP. The remaining 1,049 acres of land are within the 100-year floodplain. Figure 2 shows the North site including a delineation of the portion outside of the 100-year floodplain.

South Site

The South Site has a total area of 102 acres with the majority of the land within the 100-year floodplain. There is a portion of land totaling approximately 11.6 acres located on the north side of the site that is located outside the 100-year floodplain. This area is adequate for the new WTP. The remaining 90 acres are within the 100-year floodplain. Figure 3 shows the South Site including a delineation of the portion outside of the 100-year floodplain.

Room to Expand

The new WTP will be sized to serve the ultimate buildout of the City. The ability to expand the facility will be incorporated into the site plan, should future improvements or expansion be required. Both the North Site and the South Site have adequate land outside of the 100-year floodplain to expand if necessary.

Ownership

The City owns both the North Site and the South Site. Neither alternative would require the City to purchase land.

Zoning and Platting

The land on which the new WTP will be constructed must be zoned as industrial. The North Site lies outside of the City boundaries and has no zoning classification. The South Site is currently zoned as open space. Changing the zoning of either site will require an additional institutional process.

The City and the County may require the future WTP to be platted. It is typically easier to plat only the area that will contain the WTP in lieu of platting the entire property.

Raw Water and Finished Water Line Upgrades

The City's water system is currently supplied by 15 wells. The City recently has added two more wells (i.e., the Scalva Wells). There are two well fields in the system, the West Well Field and the East Well Field. In the future, the West Well Field will be used only during emergencies and will not be connected to the WTP.

Water from wells 1, 2, 3, 4, 5, 7, 8, 9, 10, 15, and 30 in the East Well Field is conveyed to the distribution system via two 24-inch and one 14-inch finished water lines. The three finished water lines enter the distribution system in the center of town along Chestnut Street. Water from Scalva Well 1 and 2 is conveyed to the distribution system via a 24-inch finished water line entering the distribution system on the north side of the City along Right of Way Road to the southwest of the Ethanol Plant.

North Site

The North Site is located to the north of all of the wells in the East Well Field. Raw water line upgrades would include approximately 6,000 linear feet of pipe along Highway 6 and North Riverview Road connecting to the North Site. Finished water line upgrades would include approximately 6,000 linear feet of pipe from the North Site to the existing transmission lines. Additionally, several piping modifications would be necessary.

South Site

The South Site is located midway between all of the wells in the East Well Field. Raw water line upgrades would include approximately 2,500 linear feet of pipe along Highway 6 and North Riverview Road connecting to the South Site. Finished water line upgrades would include approximately 6,000 linear feet of pipe from the South Site to the existing finished water lines. Additionally, several piping modifications would be necessary.

Electrical/Gas Service

The new WTP will require three phase 480 volt power as well as natural gas for various uses within the facility. Coordination with Xcel Energy has indicated that adequate three phase, 480 volt overhead power existing at both the North Site and the South Site.

Telephone Service

Telephone service will be necessary to allow calls to and from the WTP operators. Additionally, there may be certain remote control features of the new WTP that will require a telephone line.

Utility Conflicts

During the construction of the WTP, any utilities that interfere with subsurface work may require relocation. Relocating utilities is an additional cost.

North Site

The North Site does not have any anticipated major utilities that would interfere with construction. The Henderson Cole Ditch flows through the south end of the site within the portion of land outside of the 100-year floodplain. The Burlington Northern Railroad tracks run along the southern border of the North Site. A railroad crossing would be necessary for a raw water line to the North Site and a finished water line from the North Site to the existing finished water lines along Chestnut Street.

South Site

The South Site has a 15-inch gravity sewer line running south to north through the middle of the site. The 15-inch sewer line also has a 4-inch service tap serving the clubhouse for the Riverview Golf Course. The sewer line would most likely need to be rerouted. The Burlington Northern Railroad tracks run between the South Site and the Scalva Wells. A railroad crossing would be necessary for a raw water line from the Scalva Wells to the South Site and a finished water line from the South Site to the existing finished water line that enters the distribution system on the north side of the City.

Sewer Availability/Capacity

The City owns and operates a collection system with a centralized wastewater treatment plant (WWTP) located along County Road 370. The WWTP is approximately 3.6 miles north of the North Site and 3.9 miles north of the South Site. The new WTP will require sewer service for the plant staff, process drain lines, and service sinks within the facility. Depending on the treatment process selected, sewer service may also be necessary in order to dispose of sludge generated from the WTP.

North Site

A 20-inch force main runs along County Road 370 to the WWTP on the east side of the North Site. The 20-inch force main is pressurized by a lift station located on the southern side of the site. If the WTP were to be constructed on the North Site, approximately 500 linear feet of gravity sewer pipe would need to be installed to convey wastewater from the WTP to the existing lift station. An evaluation of the lift station capacity will be required if the WTP sludge is to be discharged to the sewer. The existing capacity is unknown.

South Site

The South Site includes a 15-inch gravity sewer line through the site. The sewer line may need to be rerouted. The drain line from the WTP could tap into the 15-inch gravity sewer line which ultimately discharges to a lift station that conveys wastewater to the WWTP via a 20-inch force main. A capacity evaluation of the 15-inch gravity sewer line and the lift station will be required if the WTP sludge is to be discharged to the sewer. The existing capacities are unknown.

Delivery Access

Adequate access for chemical deliveries must be available at the new WTP. Space should include an access road around the facility to access the chemical storage tanks. Additionally, access for construction equipment must be planned for construction of the WTP.

North Site

The North Site lies along County Road 370 which runs north and south on the eastern side of the site. The preferred location for the WTP is on the southern end of the site just west of County Road 370. The Henderson Cole Ditch would need to be crossed to provide an access to WTP at this location. A bridge or a box culvert may be required. Coordination with the County will be required to obtain drive access to County Road 370.

South Site

The South Site lies along County Road 370 which runs along the eastern side of the site. The preferred location for the WTP is on the north side of the site just west of County Road 370. Coordination with the County will be required to obtain drive access to County Road 370.

Impact to Adjacent Property Owners

The WTP is an industrial facility with continuous operation. Consideration must be made to the impact on property owners located near the facility.

North Site

There are two residential properties located adjacent to the preferred location for the WTP. One of the properties is located to the north east and one is located across the railroad tracks to the south.

South Site

The preferred location for the WTP within the South site is not bordered by any residential structures. The Riverview Golf Course is located adjacent to the site to the east across County Road 370. There is agricultural property adjacent to the site to the north.

Subsurface Conditions

Subsurface conditions should be considered when comparing the two sites. Factors such as foundation bearing capacity, expansive clays, depth of bedrock, soluble sulfates, and depth of groundwater should be taken into consideration.

A soils report prepared for Ducks Unlimited and the Scalva Well boring logs were evaluated to determine the suitability of the site for construction. Both of these investigations are within the North Site; however, the soils report is for an area located approximately 1.5 miles north of the preferred location for the WTP. The reports indicate a preponderance of sand and gravel with no evidence of expansive clays. Depth of bedrock did not appear to be a concern. Neither investigation evaluated soluble sulfates. The data showed shallow groundwater between 6 and 10 feet deep which would require some additional construction measures to prevent tanks from floating when empty.

No subsurface investigations are available for the South Site; however, the site's relative proximity to the South Platte River and to the North Site would suggest that the subsurface conditions may be similar to the North Site.

It is recommended that soil borings be performed for the selected site.

Endangered Species/Wetlands/Historic Uses

Funding agencies require that environmental issues be considered in the evaluation of project alternatives, and that a detailed environmental analysis be prepared for the selected alternative.

EVALUATION MATRIX

Using the criteria described above, an evaluation matrix was developed to calculate an overall score to compare the two alternative sites. Each criteria category was assigned a weighting factor ranging from one to ten. Input from the City is required to confirm the weighing factors assigned. A weighting factor of ten represents the most important criteria, and a weighting factor of one represents the least important criteria. The two alternatives were then assigned a rank for each criterion on a scale of one to ten. A rank of ten is the best rank an alternative can receive and a rank of one is the worst rank that an alternative can receive. The weight and the rank are then multiplied together for each criterion to calculate a score, and the overall score is added to calculate a total for each alternative. Table 1 presents the evaluation matrix for the two alternatives.

Table 1 – Site Selection Evaluation Matrix

Criteria	Weighting Factor [1]	South Site		North Site	
		Rank [2]	Score [3]	Rank [2]	Score [3]
Adequate Size/Location Within Floodplain	10	9	90	9	90
Room to Expand	8	9	72	9	72
Ownership	4	10	40	10	40
Zoning and Platting	4	7	28	8	32
Raw Water and Transmission Line Upgrades	8	9	72	5	40
Electrical/Gas Service	7	10	70	10	70
Telephone Service	6	8	48	8	48
Utility Conflicts	6	7	42	9	54
Sewer Availability/Capacity	9	9	81	7	63
Delivery Access	8	9	72	6	48
Impact to Adjacent Property Owners	9	6	54	7	63
Subsurface Conditions	8	5	40	5	40
Endangered Species/Wetlands/Historic Uses	7	5	35	5	35
Total Score		**744**		**695**	

[1] Weighting Factor, on a scale of 10 (most important) through 1 (least important)
[2] Rank, on a scale of 10 (best) through 1 (worst)
[3] Score = Weighting Factor X Rank

CONCLUSIONS

As calculated above in Table 1, the overall score between the two potential sites favors the South Site. The most influential factors that make the South Site the preferred site are the raw water and transmission line upgrades and the delivery access. It is recommended that the South Site be selected for the WTP. The site selection should be further confirmed by an investigation into the following items:

1. Soil borings
2. Property title search to identify utilities and easements (conservation easements)
3. Environmental assessment
4. Ease of change in zoning
5. Requirements to construct a drive access from County Road 370
6. Railroad crossing requirements (bore and jack)
7. Lift station capacity evaluation
8. Capacity evaluation for 15-inch gravity sewer line along North Riverview Road

T:\PROJECTS---CLIENTS\STERLING\STRLNG02\1-PREDESIGN\COMMUNICATIONS\TECHNICAL MEMOS\TM 4 SITE SELECTION\DRAFT TECHNICAL MEMORANDUM NO 4 - SITE SELECTION 12-19-08.DOC

DRAFT
TECHNICAL MEMORANDUM NO. 5

TO: Joseph Kiolbasa, P.E., City Manager
City of Sterling
FROM: Rob Demis, P.E. and D. Ryan Walsh
Richard P. Arber Associates
DATE: April 3, 2009
JOB NO.: STRLNG02
SUBJECT: Sterling Water Treatment System
Water Treatment Plant Capacity Evaluation

PURPOSE

The City of Sterling (City) is currently undertaking a water treatment plant (WTP) project to address exceedances of primary National Drinking Water Standards for Uranium and disinfection by-products (DBP). An analysis has been completed projecting water demands for the City. This Technical Memorandum (TM) describes three demand scenarios for the WTP.

The first demand scenario represents potable water demands assuming the City does not enact any additional water conservation activities. The second demand scenario represents potable water demands assuming the City implements additional water conservation activities as outlined in the Water Conservation Plan (WCP). The third demand scenario represents potable water demands assuming the City implements additional water conservation activities as outlined in the WCP and installs additional irrigation wells to serve seven parks currently irrigated with water from the potable distribution system.

BACKGROUND

The City is located approximately 120 miles northeast of Denver along Highway I-76, and is located adjacent to the South Platte River. Primary water uses in the City include residential, commercial, industrial, and government water use, as well as irrigation. The City water system serves a residential population of approximately 13,900 people, and approximately 4,570 service taps.

The City is currently supplied water by 30 existing wells. The potable distribution system is served by 15 of the 29 wells. The irrigation-only wells consist of 12 of 29 wells. The ethanol plant is served by two wells. One well is dedicated to providing augmentation water only, and is not used for potable use or irrigation. The City recently has added two more potable wells (i.e., the Scalva Wells), which are not yet part of City's distribution system. The City intends to include these wells upon approval from the CDPHE. This TM focuses on the potable system only.

The new WTP will be integrated into the existing distribution system. Irrigation-only wells will remain disconnected from the potable system along with the dedicated wells for the ethanol plant. The potable wells for the City reside in two well fields; the east well field located east of the City and east of the South Platte River and the west well field located west of the City. The new WTP will be constructed on the east side of the City. Wells in the west well field will not be connected to the new WTP and will serve as emergency wells only.

HISTORIC DEMANDS

Annual average and monthly average demand data was used to develop historic demands from 2001 to 2008 for the potable water system. Annual average demand data was provided by Bishop-Brogden Associates, Inc. Monthly demand data was provided by the City of Sterling. The demand data provided indicates that the demands have not increased significantly over the last eight years. Peak day demand was provided by the City of Sterling. Figure 1 illustrates the historic demands for the City of Sterling, including the peak day demand for 2003, 2004 and 2006.

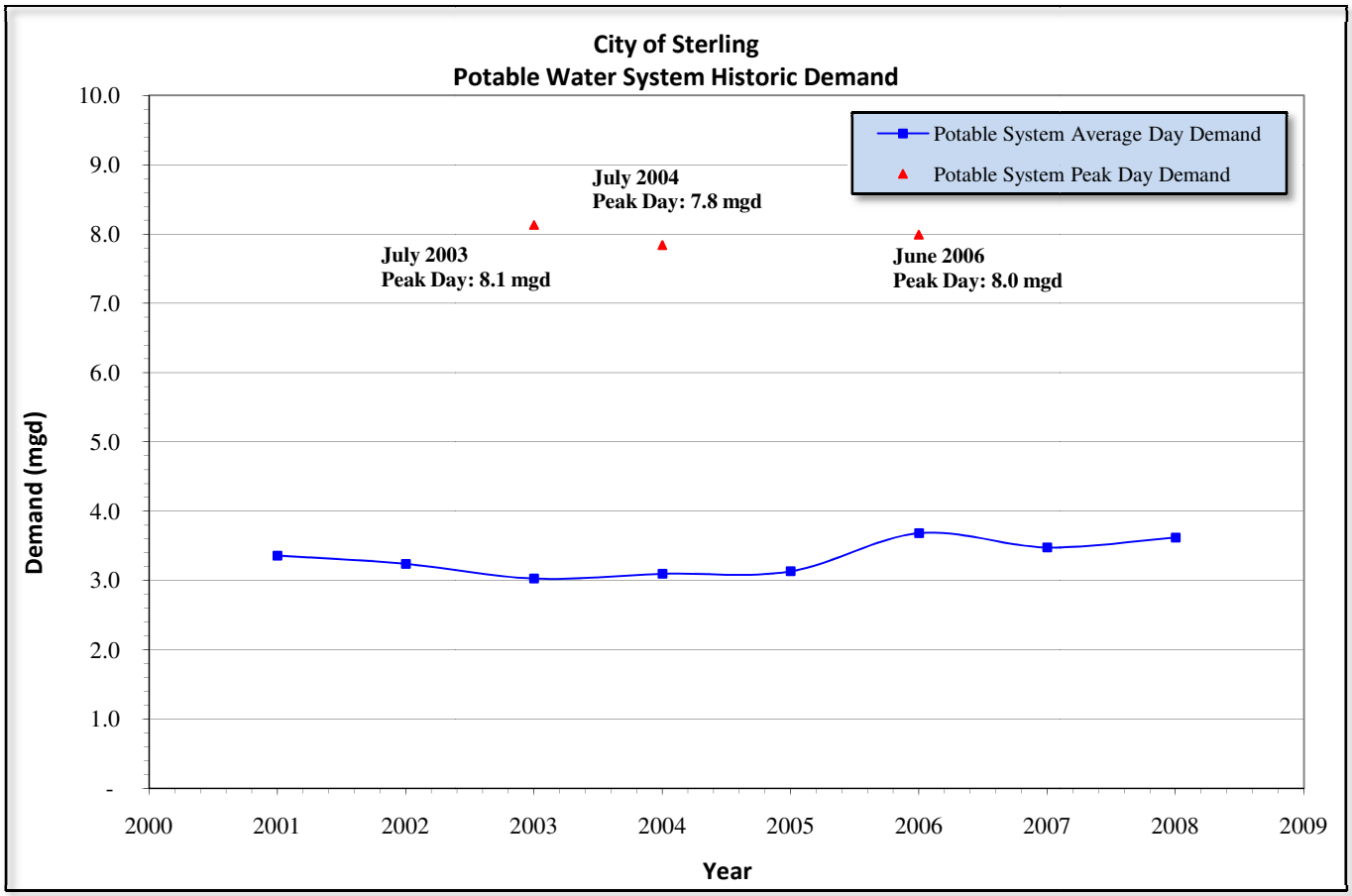

FIGURE 1: HISTORIC WATER DEMANDS (POTABLE SYSTEM)

DEVELOPMENT OF HISTORIC PEAKING FACTORS

Water production data from 2003 – 2007 was analyzed to determine peaking factors for peak month and peak day demands. The average daily demand over the noted time period was 3.4 mgd. The peak month demand over the noted time period was in June of 2006 at 7.2 mgd. The resulting peak month to average day demand ratio is calculated to be 2.12. The peak day demand over the noted time period was on June 15, 2006 at 8.0 mgd. The resulting peak day to average day demand ratio is calculated to be 2.35.

DEMAND PROJECTIONS

Demand projections for the water treatment system are based upon population projections. Population projections for Logan County were obtained from the Department of Local Affairs (DOLA) website.

Population projections for the City of Sterling were developed using the same growth rate projected by DOLA for Logan County. Figure 2 illustrates population projections for Logan County and the City of Sterling:

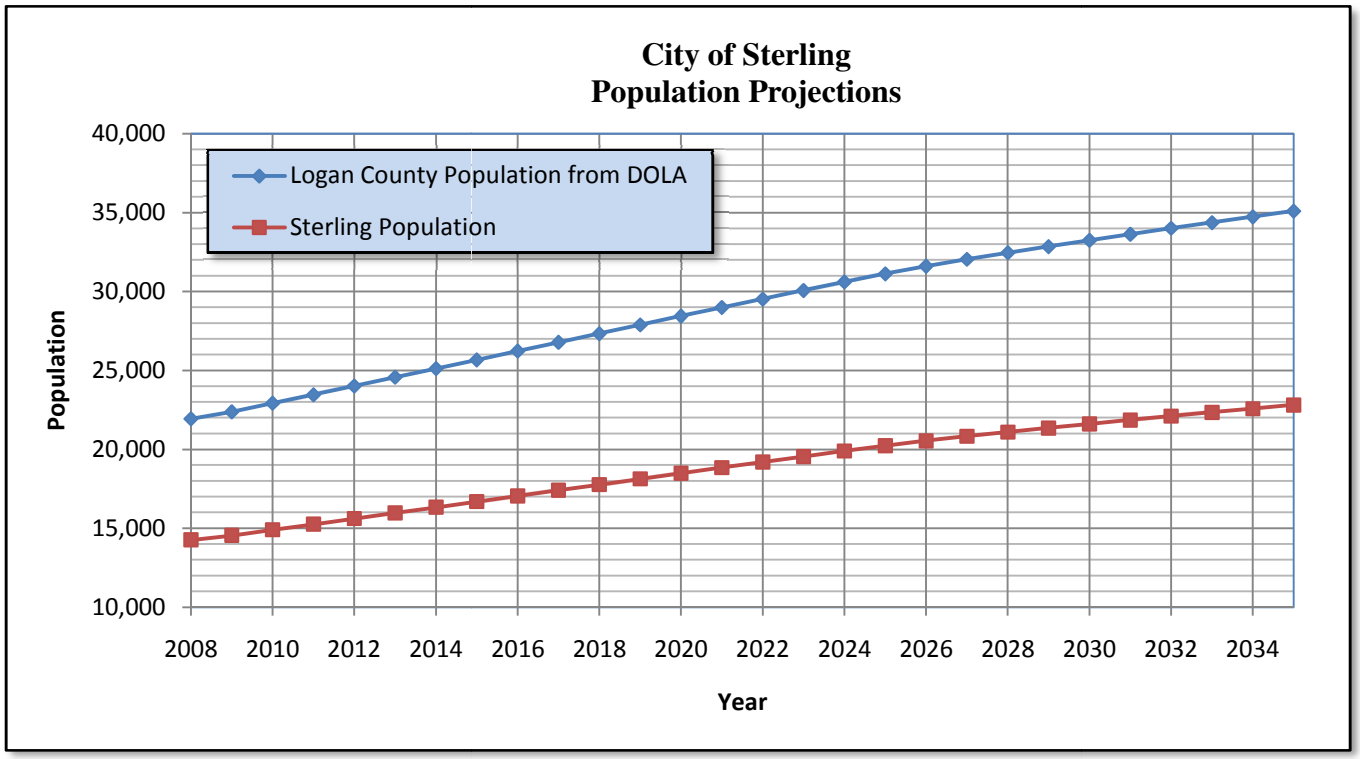

FIGURE 2: POPULATION PROJECTIONS

The new WTP will be designed to meet the peak day demand for the potable water system. Billing and pumping data from the City of Sterling Finance Department and Public Works Department has been collected and compiled to break down the existing water demands by user class. The user classes for the City of Sterling are as follow.

- Single family residential
- Multi-family residential
- Commercial
- Industrial
- Government
- Parks

Three demand scenarios were developed to project future demands on the potable water system.

1. Scenario No. 1: No Additional Water Conservation
2. Scenario No. 2: Additional Water Conservation as Identified in the WCP
3. Scenario No. 3: Additional Water Conservation as Identified in the WCP Plus Installation of Additional Irrigation Only Wells

The three demand scenarios are explained in detail in the following sections.

Scenario No. 1 - Projections With No Additional Water Conservation

Scenario No. 1 projects water demand if the City does not enact any additional water conservation other than the measures and programs already implemented. The following methodology was used to project potable water demands for the City.

Single Family and Multi-Family Residential Demand

Population projections were obtained from the Department of Local Affairs (DOLA) website. DOLA provides population projections for Logan County. Current per capita residential demand and the DOLA population projections were used to project single family and multi-family water demand into the future.

Commercial and Industrial Demand

Commercial and industrial connections have been grouped together as non-residential connections. The number of non-residential connections is anticipated to increase at the same annual rate as the population. It is estimated that the per-connection non-residential demand will remain constant. The projected non-residential connections and the per-connection demand were used to project non-residential demand into the future.

Government Demand

Government demand is mainly comprised of the Colorado Department of Corrections (CDOC) facility. According to conversations with the warden, the CDOC facility has no plans for future expansion. As such, the demand for the facility is estimated to remain constant with time.

Parks Demand

Some of the City's parks are irrigated with water from the potable distribution system. As population increases, there will be a demand for more parks and open space; therefore, the demands for these facilities are estimated to increase at the same annual rate as the population.

Unaccounted for Demand

In addition to the above listed user classes, an additional demand for the potable system is unaccounted for water. Unaccounted for water is the difference between the water that is produced and the sum of water sold and accounted for losses in the system. Unaccounted water typically consists of system leakage, meter inaccuracies, illegal connections, and uses that are unmetered such as main flushing and fire fighting. The existing unaccounted water for the City has been estimated at 17% based upon recent billing and pumping records. The current estimate of unaccounted for water was used to project demand into the future.

Peak Day Demand

According to historic average day and peak day demands, the average ratio of peak day to average day for the City of Sterling is 2.35. This peaking factor has been applied to projected average day demands to project peak day demands.

Figure 3 illustrates the projected water demands with no additional water conservation.

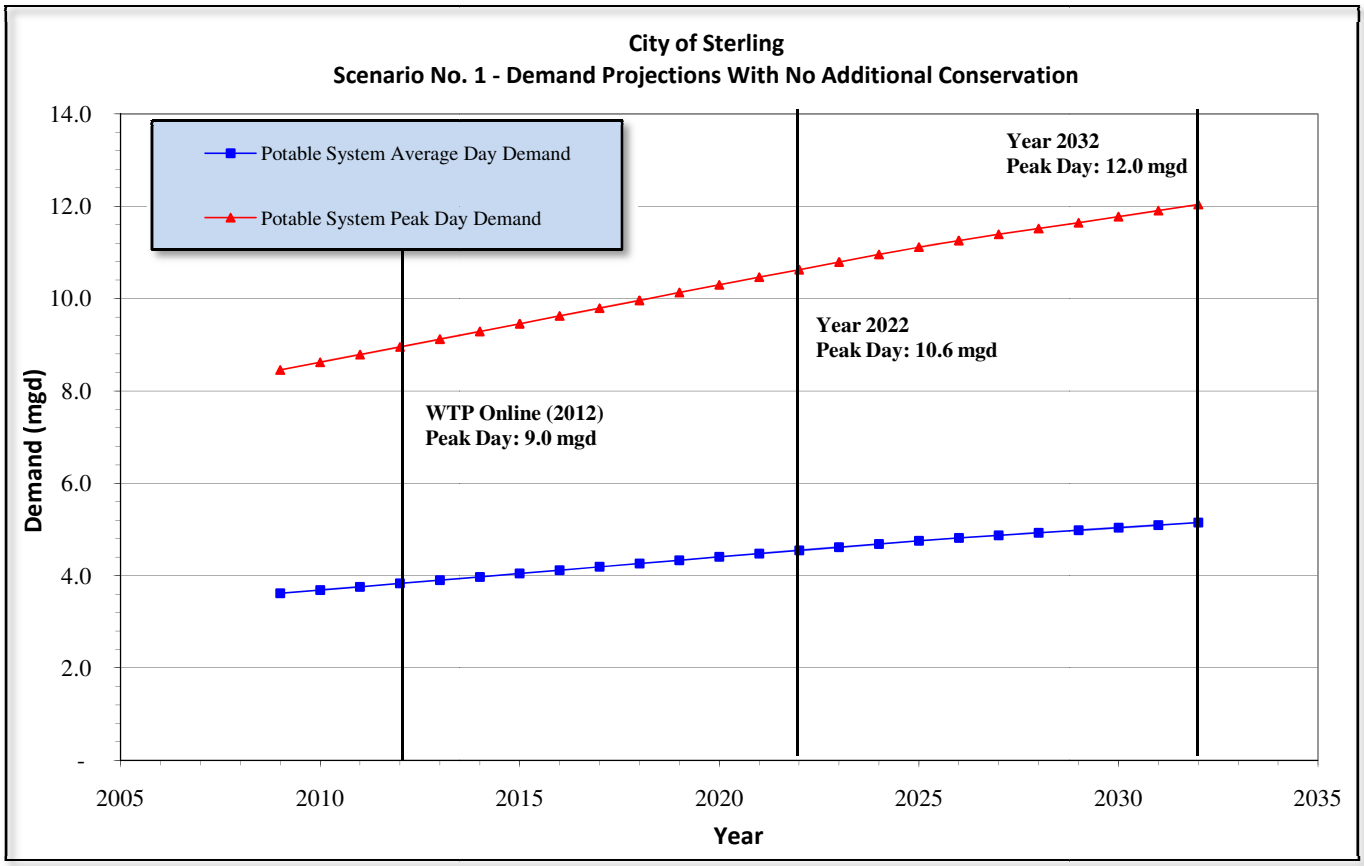

FIGURE 3: SCENARIO NO. 1 – NO ADDITIONAL CONSERVATION

Scenario No. 2 - Projections With Additional Water Conservation

A WCP has been prepared for the City of Sterling. The WCP sets water savings goals for the City. Goals have been set for the City to save between 5% and 10% of total annual average water demand for all users (potable and non-potable) and between 5% and 10% of peak day demand for the potable system by the year 2022. In order to meet the identified goals, the City must implement a number of measures and programs to reduce overall future water use. The WCP clusters the measures and programs into logical groupings and evaluates each Group based on cost, water savings, and other relevant criteria. The Groups of measures are summarized in Table 1 below.

TABLE 1: WATER CONSERVATION GROUPS OF MEASURES

Group of Measures	Estimated Water Savings	Estimated Cost
Group No. 1 Rebates	Average Day Demand: 0.05 mgd Peak Day Demand: 0.004 mgd	$32,000 over ten years
Group No. 2 Reduction of Park Irrigation	Average Day Demand: 0.2 mgd [(1)] Peak Day Demand: 0.13 mgd	$34,000 over five years
Group No. 3 Reduction of Unaccounted for Water	Average Day Demand: 0.004 mgd	$95,000 over five years
Group No. 4 Reduction in Per Capita Residential & Per Connection Non-Residential Water	Average Day Demand: 0.07 mgd [(2)] Peak Day Demand: 0.1 mgd	$180,000 over ten years

[(1)] Approximately 0.05 mgd of the average day demand savings accounts for water from the potable system.
[(2)] Approximately 0.06 mgd of the average day demand savings accounts for water from the potable system.

The water conservation groups and measures outlined in Table 1 are explained in greater detail in the *Sterling Water Conservation Plan*, March 2009.

Demand projections were developed assuming all of the recommended Groups of measures and programs are implemented by the City. Figure 4 illustrates the projected water demands with additional water conservation.

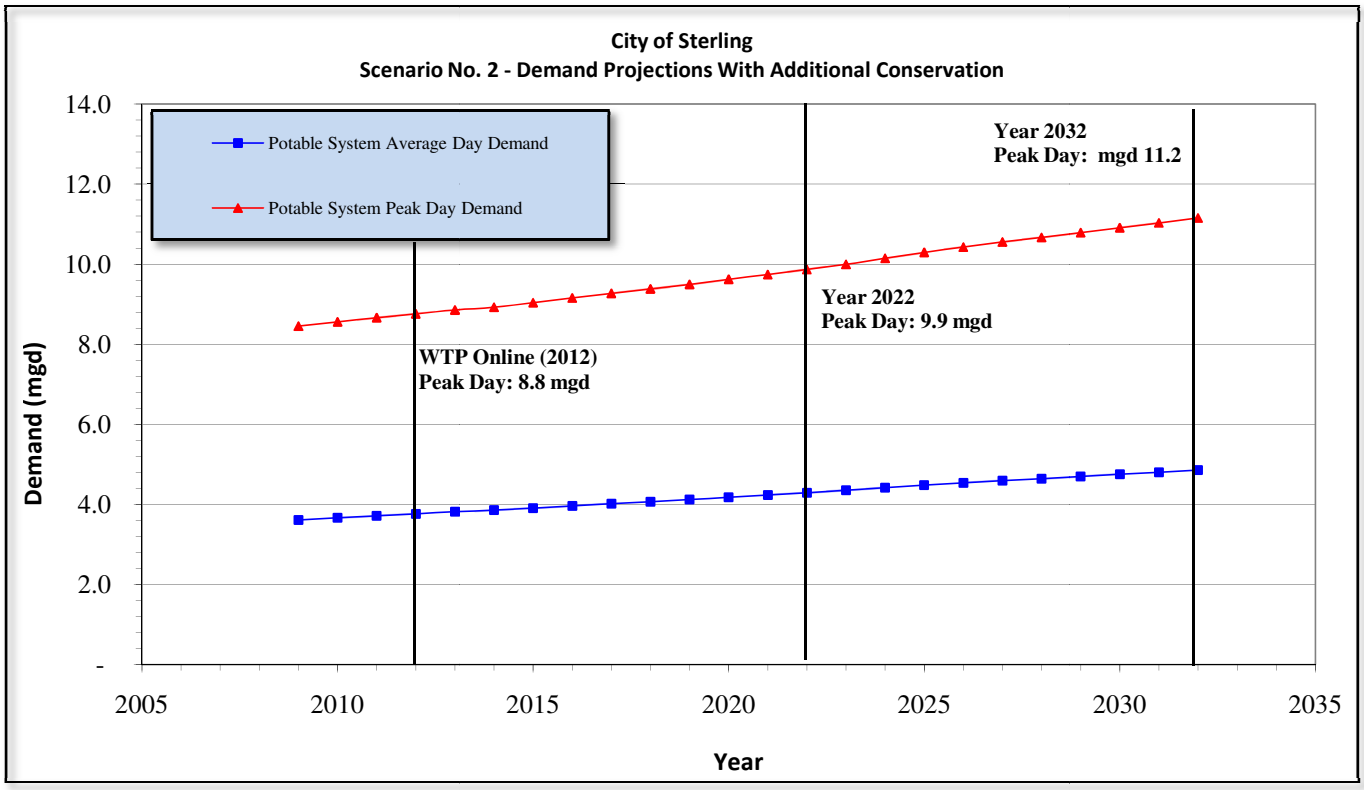

FIGURE 4: SCENARIO NO. 2 – WATER DEMANDS WITH ADDITIONAL CONSERVATION

Scenario No. 3 - Projections With Additional Conservation & Installation of Additional Irrigation Wells

Scenario No. 3 has been developed to reflect future demands with installation of irrigation-only wells to serve parks currently irrigated with water from the distribution system. Installation of additional irrigation wells would take some of the demand off of the potable system. The following seven parks would be irrigated with irrigation only wells.

- Pioneer Park (two wells)
- Prairie Park
- Cheairs Park
- Grass area north of Broadway
- Propst Park
- Krull Park
- Earl Franklin Park

The total cost to install wells in each of these parks is estimated at $400,000. Figure 5 illustrates the projected water demands with the installation of irrigation wells in the parks listed above. The water demands illustrated in Figure 5 also include water savings from Scenario No. 2.

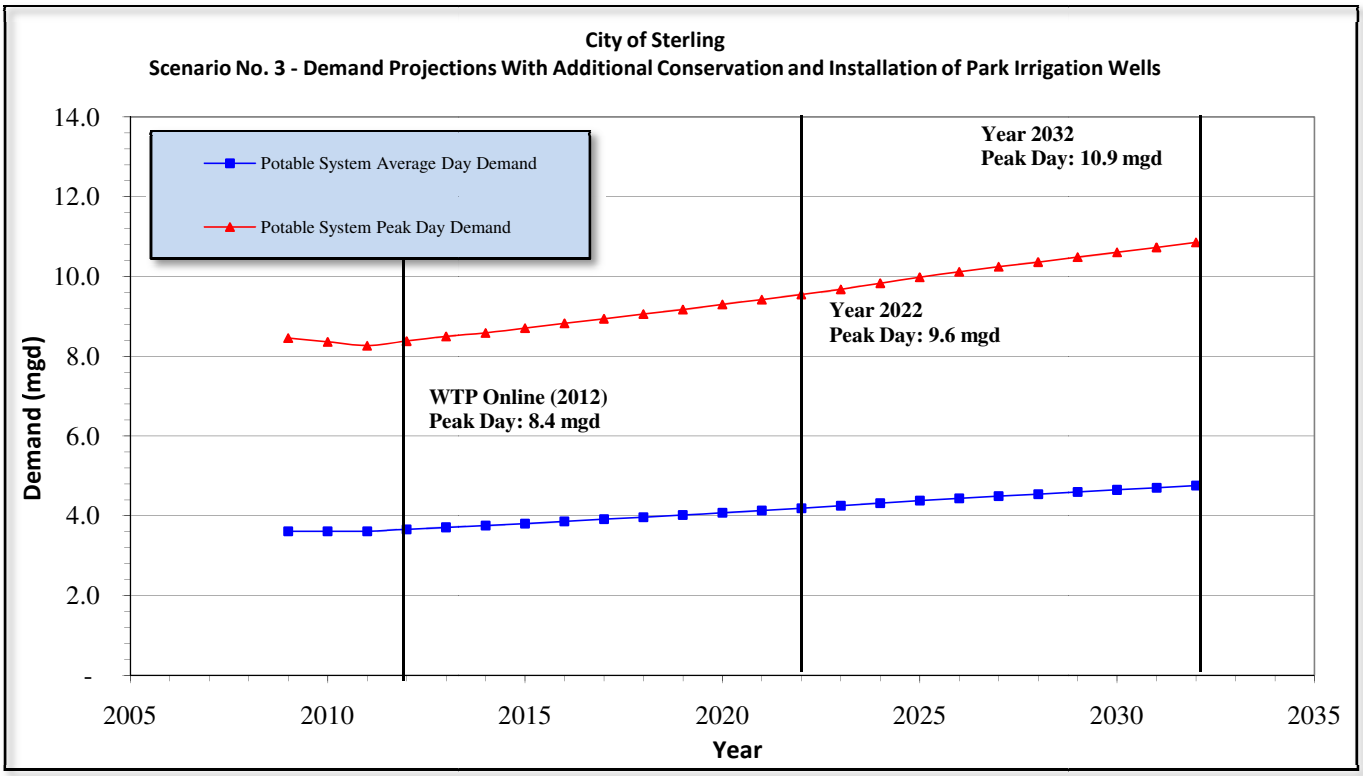

FIGURE 5: SCENARIO NO. 3 – WATER DEMANDS WITH ADDITIONAL CONSERVATION AND INSTALLATION OF PARK IRRIGATION WELLS

Installing park irrigation wells for the parks listed above is estimated to reduce the potable system peak day demand by 0.3 mgd. It is estimated that the savings in capacity would reduce the capital cost of the new WTP by approximately $300,000 - $500,000.

Installing park irrigation wells for the parks listed above is estimated to reduce the potable system annual demand by 37 million gallons. The volumetric operation and maintenance (O&M) cost for the new WTP has been estimated at $1.75 per 1,000 gallons. It is estimated that installing the park irrigation wells would save the City approximately $60,000 annually in future O&M costs.

RAW WATER DEMANDS

The demands presented above are the potable demands that will be supplied to the various users on the system. During the water treatment process, waste streams will be generated and disposed. To deliver the required amount of finished water, additional raw water must be delivered to the plant to compensate for the waste streams. The amount of raw water required will depend on the treatment technology selected. Three treatment technologies have been proposed.

- Conventional coagulation/filtration
- Single-pass nanofiltration
- Two-pass nanofiltration

Table 2 summarizes the average day raw water demands for each of the three treatment technologies and the three demand scenarios presented above.

TABLE 2: AVERAGE DAY RAW WATER DEMAND SUMMARY

Scenario	Finished Water Demand	Raw Water Demand		
		Conventional Coagulation/Filtration (98% +/- Recovery)	Single-Pass Nanofiltration (83% +/- Recovery)	Two-Pass Nanofiltration (95% +/- Recovery)
Scenario No. 1 No Additional Water Conservation	Year 2022: 4.5 mgd Year 2032: 5.2 mgd	Year 2022: 4.7 mgd Year 2032: 5.3 mgd	Year 2022: 5.2 mgd Year 2032: 5.9 mgd	Year 2022: 4.7 mgd Year 2032: 5.4 mgd
Scenario No. 2 Additional Water Conservation Measures	Year 2022: 4.3 mgd Year 2032: 4.9 mgd	Year 2022: 4.4 mgd Year 2032: 5.0 mgd	Year 2022: 4.9 mgd Year 2032: 5.5 mgd	Year 2022: 4.5 mgd Year 2032: 5.1 mgd
Scenario No. 3 Additional Water Conservation Measures & Installation of Irrigation Only Wells	Year 2022: 4.2 mgd Year 2032: 4.8 mgd	Year 2022: 4.3 mgd Year 2032: 4.9 mgd	Year 2022: 4.8 mgd Year 2032: 5.4 mgd	Year 2022: 4.4 mgd Year 2032: 5.0 mgd

The amount of raw water needed will determine the sizing of the raw water piping necessary to convey water from the supply wells to the new WTP. Additionally, the capacity of the existing wells must be

evaluated to determine whether new wells will need to be drilled. The amount of water lost from waste streams during treatment may have water rights implications for the City depending on the method by which the waste streams are ultimately disposed.

RECOMMENDATIONS

It is recommended that the new WTP be designed with adequate capacity to serve the 10-year planning horizon. Additional space will be left in the building to allow for expansion of treatment capacity. The new WTP is scheduled to be placed on line in 2012. Therefore, the 10-year planning horizon is 2022. The WTP will be designed to treat the peak day demand as it is common for multiple peak days to occur sequentially. Peak hour demands and other emergency demands, such as fire fighting, will be served by storage within the distribution system.

Table 3 outlines the 10-year and 20-year peak day demands for the three demand scenarios developed.

TABLE 3: FINISHED WATER PEAK DAY DEMANDS BY SCENARIO

Scenario	2022 Projected Demands	2032 Projected Demands
Scenario No. 1 No Additional Water Conservation	Average Day: 4.5 mgd Peak Day: 10.6 mgd	Average Day: 5.2 mgd Peak Day: 12.0 mgd
Scenario No. 2 Additional Water Conservation Measures	Average Day: 4.3 Peak Day: 9.9 mgd	Average Day: 4.9 mgd Peak Day: 11.2 mgd
Scenario No. 3 Additional Water Conservation Measures & Installation of Irrigation Only Wells	Average Day: 4.2 mgd Peak Day: 9.6 mgd	Average Day: 4.8 mgd Peak Day: 10.9 mgd

The City of Sterling will be required to have an approved WCP on file with the Colorado Water Conservation Board (CWCB) prior to receiving any State Revolving Loan (SRF) funding. Therefore, it is recommended that the City, at a minimum, implement the water conservation measures and programs identified in Scenario No. 2 in order to remain eligible for SRF funding. In addition to being a requirement for funding, water conservation is a good management practice and will reduce the capacity of the new WTP.

Scenario No. 3 would cost the City an estimated additional $400,000, and it is estimated that the installation of irrigation only wells would save the City an estimated $300,000 - $500,000 in capital costs for the new WTP. The difference between the two capital costs is essentially equal; however, it is estimated that by installing the irrigation only wells, the City could save an estimated $60,000 annually in O&M costs for treatment of potable water to be used for irrigation.

Appendix E

TMF Capacity Evaluation Worksheets

CAPACITY ASSESSMENT WORKSHEETS FOR EXISTING SYSTEMS

Technical Capacity	ANSWER	RESOURCE	OBJECTIVES OR COMMENTS
1a. Is the system in compliance with all promulgated federal and state drinking water regulations related to quality and monitoring?	No	City of Sterling Annual Drinking Water Quality Report, 2008 (Appendix A)	See attached comments.
1b. Are monitoring compliance issues being addressed?	Yes	City of Sterling Annual Drinking Water Quality Report, 2008 (Appendix A)	
1c. Considering existing source water quality and potential sources of contamination, is the available (or proposed) treatment technologies and size appropriate to meet drinking water standards?	Yes	City of Sterling Water Treatment Plant Preliminary Engineering Report, May, 2009, Available On-Site (Table of Contents in Appendix B)	
2. Does the system have proof of sufficient water rights to meet projected needs (including, if applicable, appropriate priority if water is purchased)?	Yes	Ruling of Referee and Findings of Fact, Conclusions of Law, Judgment and Decree, Available On-Site (Table of Contents in Appendix C)	
3. Is the certification level of the operator in responsible charge at or above the facility's classification level as required by Regulation 100? Consider any upcoming treatment process changes.	Yes	Operator's Names and Certification Numbers (Appendix D)	See attached comments.
4. Is the system staffed adequately considering as a minimum, the operator duties delineated in part 100.16.2 of Regulation 100? (Provide names and certifications of all operators and identify the operator in responsible charge.)	Yes	Operator's Names and Certification Numbers (Appendix D) and Job Descriptions (Appendix E)	
5. Does management provide opportunities for operator training?	Yes	Interview With City Staff.	See attached comments.
6. Does the system have an adequate emergency plan that addresses storms, floods, terrorism, security, wild fires and major mechanical or electrical failures?	No		
7. Does the system have a master plan to address infrastructure and capacity needs?	No		See attached comments.
8a. Has the system identified its source water area and potential sources of contamination?	Yes	CDPHE Source Water Assessment (Appendix F) and EPA Vulnerability Assessment Certification (Appendix G)	
8b. Does the system have a plan for protecting its source water area?	No		See attached comments.

Managerial Capacity	ANSWER	RESOURCE	OBJECTIVES OR COMMENTS
1a. Who has legal ownership of the system? – Name, Address, Phone No.	N/A		See attached comments.
1b. Does the system have an organizational chart?	Yes	City of Sterling, Colorado Organizational Chart: Water System (Appendix H)	
1c. Is there a clear delegation of responsibilities?	Yes	Job Description (Appendix E)	
1d. Do managers have a procedure to monitor personnel performance?	Yes	City of Sterling Performance Evaluation Worksheet (Appendix I)	See attached comments.
2. Is there a record keeping system for all required records?	Yes		
a. Monitoring	Yes	Records Available Onsite	See attached comments.
b. Operating	Yes	Records Available Onsite	See attached comments.
c. Maintenance	Yes	Records Available Onsite	See attached comments.
d. Financial	Yes	Records Available Onsite	See attached comments.
3a. Does the system have a map and description of the treatment facility?	Yes	Record Drawings Available On-Site	
3b. Does the system have a map and description of the distribution system?	Yes	Record Drawings Available On-Site	
4a. Is the system implementing an O & M Plan that includes all existing equipment and processes essential to provide safe drinking water?	Yes		See attached comments.
4b. Does the system plan to include a requirement that an O&M manual be provided for any new equipment detailing startup, shutdown and maintenance procedures?	Yes		See attached comments.
5. Does the system have an adequate cross-connection control program?	Yes	City of Sterling Cross Connection Control Program (Appendix J)	
6. Does the system have a program to address water that is lost due to leakage?	Yes	Interview With City Staff.	See attached comments.
7. Does the system log or track, and address customer questions or complaints?	Yes	Interview With City Staff.	See attached comments

Financial Capacity	ANSWER	RESOURCE	OBJECTIVES OR COMMENTS
1. Does the system use enterprise accounting, and does it have the required revenues and reserves for current and future operations?	Yes	Annual Audits (Appendix K) and Cash Flow Projection (Appendix L)	
2. Is a reserve system established to help pay for replacements and contingencies (i.e. emergencies)?	Yes	Annual Audits (Appendix K) and Cash Flow Projection (Appendix L)	
3. Do key financial ratios indicate adequate cash flow, liquidity, and affordability?	Yes	Financial Statement (Available onsite) and Cash Flow Projection (Appendix L)	
4. Do bond ratings for the system or its owners indicate creditworthiness?	Unknown		
5. Does the system follow accepted accounting standards and practices?	Yes	Annual Audits (Appendix K)	
6. Does the system conduct audits or perform well in audits conducted by others?	Yes	Annual Audits (Appendix K)	
7. Does the system prepare an annual budget and capital improvement plan?	Yes/No	2009 Annual Budget (Appendix M)	See attached comments.
8. Does the system maintain a user charge system that allows equitable billing, collection and enforcement?	Yes	Water Rates Resolution for 2005 through 2009 (Appendix N)	
9. Does the system utilize metering?	Yes	Interview With City Staff.	See attached comments.
10. Does the system maintain general liability insurance?	Yes	Proof of Liability Insurance (Appendix O)	
11. Does the system have pending lawsuits that may result in substantial financial losses?	No	Interview with City of Sterling Staff	See attached comments.
12. Do election records suggest board instability or general public dissatisfaction with its policies?	No	Interview with City of Sterling Staff	See attached comments.
13. Has the system filled out a cash flow projection or a comparable financial spreadsheet?	Yes	Cash Flow Projection (Appendix L)	
14. Has the system undertaken a cost of service study that allows it to fund operations, debt service, depreciation, and rate of return?	Yes	Interview With City Staff.	See attached comments.

APPLICANT: **City of Sterling, Colorado**
PREPARED BY: **Richard P. Arber Associates**
198 Union Boulevard, Suite 200
Lakewood, Colorado 80228
PHONE NUMBER: **(303) 831-4700**
DATE: **June 1, 2009**

ADDITIONAL INFORMATION FOR THE TMF FORM (ATTACHED COMMENTS)

TECHNICAL

Question 1a

The City of Sterling currently exceeds the primary Uranium standard of 30 ug/L. Additionally, the City has exceeded the primary standard for total trihalomethanes in the recent past. A new water treatment plant is being designed that will bring the City into compliance with all federal and state drinking water standards, as well as addressing secondary water quality standards. A copy of the Preliminary Engineering Report will be available onsite and an appendix of the report is attached in Appendix B.

Questions 3, 4 and 5

The City of Sterling's new Water Treatment Plant will likely be classified as a Class A Water Treatment Facility because it employs Reverse Osmosis, and chemical addition. Additionally, the water distribution system is a Class 2 system. Bill Wright is a Class A Water Operator and a Class 4 Distribution Operator and will be the designated Operator in Responsible Charge (ORC).

The City of Sterling employs water system operators who are certified by testing and examination by the Colorado Operator Certification board. Job Descriptions specify and delineate the level of certification that is required for each position.

The City of Sterling provides internal training for all water system employees. All employees are given in-depth tours of water storage sites, well locations and pump stations during their first week of employment. Additional training is provided in a hands-on environment with less experienced personnel shadowing senior employees so they have an opportunity to have questions answered as they arise.

The City also pays for employees to attend the necessary formal training to maintain their license levels. Employees have attended the Boulder and Leadville operator schools as well as other training venues across the state. Additionally, the City encourages all of their employees to raise their certification levels as their careers progress.

Question 8b

The City of Sterling does not have a formal source water protection plan; however, all well heads are enclosed within a well house. Each well house is normally locked. Only authorized personnel have keys to access the well houses. Additionally, each well house is inspected on a daily basis, to ensure they are operating properly and have not been tampered with.

MANAGERIAL

Question 1a

PWSID# CO 0138045
Legal Title: City of Sterling
Name: Joe Kiolbasa, City Manager
Address: 421 North 4th Street
P.O. Box 4000
Sterling, CO 80751
Phone: (970) 522-9700

Question 1d

The City of Sterling performs annual performance reviews of all employees on an annual basis. During the review process previous employee goals are reviewed, upcoming goals are developed and the individual's performance is rated.

Question 2a

All monitoring records are kept onsite, organized by date, in the water operator's office. Records are available onsite from 1997 to present, meeting or exceeding the requirements of the Colorado Primary Drinking Water Regulations.

Question 2b

The City maintains daily checklists at each well house to track operator activities. Any unusual conditions are noted at the bottom of the checklist. Completed checklists are taken from the well house each month and stored at the City's offices.

Question 2c

Routine maintenance is performed according to the manufacturer's recommendation for all equipment. Intervals between maintenance will not be less than the frequency that is prescribed by the Original Equipment Manufacturer (OEM).

The City has recently implemented a maintenance logging system that will track the work performed, date of service and who performed the work at each equipment location. Logs will be handwritten and stored at each equipment location. Non-routine maintenance is generally performed by an outside contractor. Contracted work is tracked using purchase orders which are managed through the City's financial records system. Additionally, a copy of all purchase orders is kept in the water operator's office.

Question 2d

Financial records for the City of Sterling are kept in an electronic database by the City's financial department. Files are sorted by vendor, date, and billing category (i.e. well servicing). These records,

including balance sheets, income statements, statement of retained earnings, statement of cash flow and financial notes are used for budgeting on an annual basis.

Question 4a

Routine maintenance is performed according to the manufacturer's recommendations. The intervals between maintenance will not be less than the frequency prescribed by the Original Equipment Manufacturer (OEM). Routine maintenance also includes operation of isolation valves, fire hydrants and water meters in the distribution system.

Larger equipment maintenance items and specialty equipment is performed by OEM representatives. Some of these items include: generators, variable frequency drive controllers, and certain electrical components.

Question 4b

A comprehensive O&M manual will be prepared for the new facilities identified in the preliminary engineering report. The Contractor will be required to submit O&M manuals for individual pieces of equipment.

Question 6

The City of Sterling has purchased an ultrasonic leak detector to identify leaking pipes and valves within the distribution system. A leak survey has been implemented which will first address leaking valves at fire hydrants. Following assessment of fire hydrant connections, the leak detector will be used to identify leaking pipes throughout the remainder of the distribution system.

Question 7

Customer complaints are reported to City Hall and are recorded on Action Request Forms. The Action Request Form is then sent to the appropriate department, so the issue can be resolved. These forms describe the location, date and nature of the complaint, as well as identifying the action taken and who filed the complaint. Action Request Forms are stored in a computerized database that can be used to identify trends in complaints.

FINANCIAL

Question 7

The City of Sterling does not have a formal Capital Improvements Plan. Capital improvements are scheduled on an annual basis as part of the budgeting process. The capital improvements worksheet included in Appendix M was prepared as part of the DWRF application.

Question 9

All connections are metered with the exception of some municipal connections. All municipal connections that are currently unmetered will have meters installed by 2012.

Question 11

The City of Sterling does not have any current or pending lawsuits per an interview with the City Manager. The City is actively involved with the water court to ensure their existing water rights are protected from outside interests.

Question 12

The City of Sterling generally does not have turnover during their elections unless members of the council have reached their term limits per an interview with the City Manager.

Question 14

The City of Sterling is currently performing a rate study with The Engineering Company. The rate study is anticipated to be completed by August of 2009.

Appendix F

Vulnerability Study Certification

Appendix 1

VULNERABILITY ASSESSMENT CERTIFICATION

Public Water System ID number: CO0138045

System Name: City of Sterling

City where system is located: Sterling

State : Colorado

Printed Name of Person Authorized to Sign this Certification on behalf of the System: William D. Wright

Title: Water/Wastewater Superintendent

Address : 421 North 4th Street

City: Sterling

State and ZIP Code: Colorado 80751

Phone: 970-522-2619 **Fax:** 970-521-7141 **Email:** wright@sterlingcolo.com

I certify to the Administrator of the U.S. Environmental Protection Agency that this community water system has conducted a vulnerability assessment that complies with Section 1433(a)(1) of the Safe Drinking Water Act, as amended by the Public Health Security and Bioterrorism Preparedness and Response Act of 2002 (Public Law 107-188, Title IV— Drinking Water Security and Safety).

I further certify that this document and all attachments were prepared under my direction or supervision. I am aware that there are significant penalties for submitting false information (Safe Drinking Water Act (42 U.S.C. 300f *et seq.*)).

The vulnerability assessment this community water system conducted addresses the following components of my system (Check YES if the CWS has the element in its system; check N/A if the element is not applicable to the system.):

YES	N/A	
☑	☐	pipes and constructed conveyances
☑	☐	physical barriers

☐	☑	water collection
☐	☑	pretreatment
☑	☐	treatment
☑	☐	storage
☑	☐	distribution facilities
☑	☐	electronic, computer or other automated systems which are utilized by the public water system
☑	☐	the use, storage, or handling of various chemicals
☑	☐	the operation and maintenance of such system

Other components in the CWS that were evaluated under this VA (list those applicable):

Wastewater collection system and treatment system were evaluated under this VA which included many of the same elements as the water system.

Signed: William D. Wright **Date:** June 29, 2004

Primary contact person that EPA can call if there are questions about this Certification and VA submission:

Name: William D. Wright

Address (if different than that of the Authorized Representative):

Phone: 970-522-2619

Email Address: wright@sterlingcolo.com

Alternate Contact Person:

Name: Donald Aldrich

Address (if different than that of the Authorized Representative):

Phone: 970-522-9700

Email Address: aldrich@sterlingcolo.com

Appendix G

Raw Water Quality Data

Water Quality Sampling Data

RO Feed Stream

		SAMPLING DATE[1]						
Parameter	Units	2/24/2009	2/25/2009	3/24/2009	3/25/2009	Average	Minimum	Maximum
Alkalinity	(mg/L CaCO3)	259	238	198	261	239	198	261
Aluminum	(mg/L)	u	u	0.146	u	0	0	0
Ammonia N	(mg/L)	u	u	u	u	0	0	0
Antimony	(mg/L)	u	u	u	u	0	0	0
Arsenic	(mg/L)	u	0.0048	0.0079	u	0.0064	0.0048	0.0079
Barium	(mg/L)	0.036	0.078	0.223	0.034	0.092	0.034	0.223
Beryllium	(mg/L)	u	u	u	u	0	0	0
Boron	(mg/L)	0.383	0.209	u	0.414	0.00	0.21	0.41
Bromide	(mg/L)	0.904	0.501	u	0.808	0.738	0.501	0.904
Cadmium	(mg/L)	u	u	u	u	0	0	0
Calcium	(mg/L)	249	155	83.3	246	183	83	249
Chloride	(mg/L)	140	75	30.8	130	94	31	140
Chromium	(mg/L)	u	u	0.00361	u	0	0	0
Chromium(+3 and +6)	(mg/L)							
Cobalt	(mg/L)							
Copper	(mg/L)	u	u	0.0549	u	0	0	0
Cyanide	(mg/L)				u			
Fluoride	(mg/L)	0.96	0.68	0.54	1.2	0.85	0.54	1.20
Hardness	(mg/L CaCO3)	980	550	280	970	695	280	980
Iron Dissolved	(mg/L)	u	u		u	0.00	0.00	0.00
Lead	(mg/L)	0.0016	0.0023	0.0030	u	0.0000	0.0016	0.0030
Lithium	(mg/L)							
Magnesium	(mg/L)	87	41	17	87	58	17	87
Manganese	(mg/L)	0.75	0.02	0.05	0.76	0.39	0.02	0.76
Mercury	(mg/L)	u	u	u	u	0	0	0
Molybdenum	(mg/L)							
Nickel	(mg/L)	u	u	u	u	0	0	0
Nitrate as N	(mg/L)	u	4.06	4.06	u	4.06	4.06	4.06
Nitrite as N	(mg/L)	u	u	u	u	0.00	0.00	0.00
Ortho-P as P	(mg/L)	u	u	0.21	u	0.00	0.21	0.21
pH		7.36	7.42	7.45	7.36	7.40	7.36	7.45
Potassium	(mg/L)	25	10	7	25	17	7	25
Selenium	(mg/L)	0.0020	0.0053	0.0027	0.0022	0.0031	0.0020	0.0053
Selenium (Dissolved)	(mg/L)				0.0032	0.0032	0.0032	0.0032
Silicon (dissolved as SiO	(mg/L)	12	37	43	13	26	12	43
Silver	(mg/L)	u	u	u	u	0	0	0
Sodium	(mg/L)	276	120	39.7	276	178	40	276
Strontium	(mg/L)	2.2	1.1	0.6	2.2	1.5	0.6	2.2
Sulfate	(mg/L)	1,220	512	109	1,170	753	109	1,220
Sulfide	(mg/L)		u		u			
SUVA	(L./mg-m)	1.5	1.9	2.8	1.6	2.0	1.5	2.8
TDS	(mg/L)	2,240	1,170	499	2,220	1,532	499	2,240
Thallium	(mg/L)	u	u	u	u	0	0	0
TOC	(mg/L)	4.0	2.4	1.3	4.1	3.0	1.3	4.1
Total Iron	(mg/L)	1.12	0.524	0.882	1.95	1.12	0.52	1.95
TP as P	(mg/L)	u	u	0.12	u	0.00	0.12	0.12
TSS	(mg/L)	u	u	22	u	0.00	22.00	22.00
Turbidity	(NTU)	4.87	0.72	0.61	4.81	2.75	0.61	4.87
Uranium	(ug/L)	36	31	11	36	28	11	36
UV Absorbance@254 nr	(1/m)	5.9	4.6	3.7	6.7	5.2	3.7	6.7
Zinc	(mg/L)	0.034	0.030	0.007	0.010	0.020	0.007	0.034
Americium	(pCi/L)							
Cesium 134	(pCi/L)							
Plutonium 239 and 240	(pCi/L)							
Radium 226 and 228	(pCi/L)							
Strontium 90	(pCi/L)							
Thorium 230 and 232	(pCi/L)							
Tritium	(pCi/L)							

Notes:

[1] Sampling Details

Sample Date	Location	Sampled at:
2/24/2009	Scalva1	Wellsite
2/25/2009	Site1	Booster Station
3/24/2009	Site2	Booster Station
3/25/2009	Scalva1	Wellsite

Appendix H

Pilot and Bench Scale Testing

Membrane Filtration Pilot Test Protocol
City of Sterling, CO
February 2009

Background

The City of Sterling is currently performing preliminary design for treatment facilities that will allow the City to meet primary drinking water standards. The City of Sterling has entered into an Enforcement Order with Colorado Department of Public Health and Environment (CDPHE) to address Uranium and Disinfection byproducts (DBPs) levels that exceed standards. In addition CDPHE is evaluating whether the City's well should be considered as groundwater or groundwater under the direct influence of surface water (GWUDI), which would require full filtration.

Several treatment alternatives were considered for Sterling. All of these treatment alternatives and their advantages and disadvantages along with estimated capital costs were presented to the City in a report titled *Water Treatment System – Project Criteria and Process Selection*. The City has shown interest in the membrane treatment process. Membrane treatment process will be effective for removing primary drinking water contaminants, especially uranium and disinfection byproducts (DBPs) precursors. It will also be effective in meeting secondary drinking water standards by removing hardness, sulfate and TDS from the raw water. The membrane process would also be effective treatment in positioning Sterling to meet current as well as future drinking water standards.

A pilot-scale study will be conducted at Sterling using a nanofiltration (NF) membrane process. This pilot study will help Arber to assess the effectiveness of the NF membrane and to provide design criteria for the full-scale membrane water treatment plant (WTP).

Objective

The objective of this pilot-scale study will be to develop design criteria for the proposed membrane WTP. The pilot-protocol herein will define the scope of this pilot-scale study. Pilot testing and laboratory testing will be used to obtain and analyze information needed for designing a site-specific, full-scale membrane filtration installation for Sterling.

The specific treatment objective for the pilot-scale study will be to evaluate the performance of the membrane system. In addition, it will gather pilot data, which will be analyzed to establish the following:

1. Evaluate/confirm key design criteria for the system such as flux rate, recovery and transmembrane pressure (TMP).

2. Perform an initial evaluation of pretreatment requirements for the system in order to control membrane fouling rates.
3. Perform preliminary assessment of membrane cleaning frequencies, fouling characteristics, etc.
4. Gather additional raw water quality that is pertinent to NF system design that wouldn't typically be measured (i.e., barium concentration).
5. Provide supporting information for the State review and approval.
6. More accurately characterize NF brine stream water quality for supporting discharge permit efforts and potential treatment.
7. Allows the operator to become more familiar with NF concept in relatively simple pilot format.

Description of Pilot Scale Plant

A schematic of the pilot unit is shown in Figure 1. Photos of the pilot unit are shown in Figures 2 through 5. The pilot unit will be located in a City building to protect it from weather and vandalism. Equipment included with the pilot unit includes the following:

- Two membrane element housings plumbed in series
- One 1-HP high pressure feed pump
- One cartridge filter housing
- Concentrate, permeate, and recycle control needle valves
- Concentrate, permeate, feed, and prefilter differential pressure gauges
- Concentrate, permeate, and recycle flow meters
- One chemical metering pump, one bulk chemical storage tank
- One silt density index (SDI) testing apparatus

The pilot system is designed to use standard garden hose (3/4 inch) type connections for supplying raw water to the unit; it also requires a 110 VAC electrical supply for its operation.

Pretreatment at the pilot scale plant will consist of cartridge filtration and chemical addition. A 20 inch long, 5-micron (μm) cartridge filter located at the inlet of the pilot-scale plant will remove suspended solids and will reduce fouling to the membranes. Pretreatment chemicals will be added to the feed water to reduce membrane fouling on the membrane surface. Distilled water (or NF-permeate) will be used to dilute the chemical for use in the study.

The membrane system will consist of two, single element housings arranged in series. Two NF filter elements supplied by DOW Filmtec (NF90-4040) will be used during the test. The system is equipped with flow meters, control valves, and pressure gauges to provide the data necessary from the test.

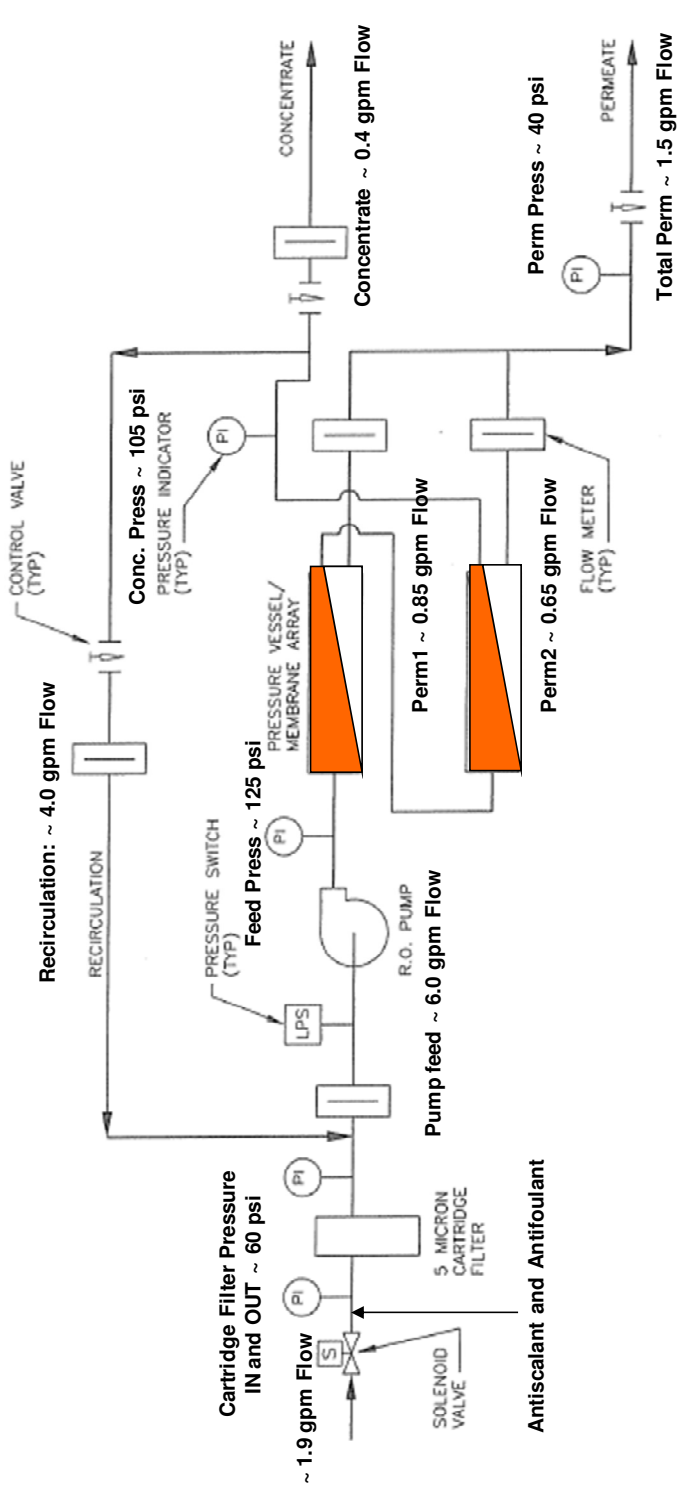

Note:

1. *Flow and pressure listed on the schematic are approximate.*
2. *Flow and pressure listed on the schematic are typical values observed from previously run pilot study using DOW Filmtec XLE-4040 membrane.*

Figure 1. Pilot Schematic

Figure 2. Front View of Membrane Pilot Unit

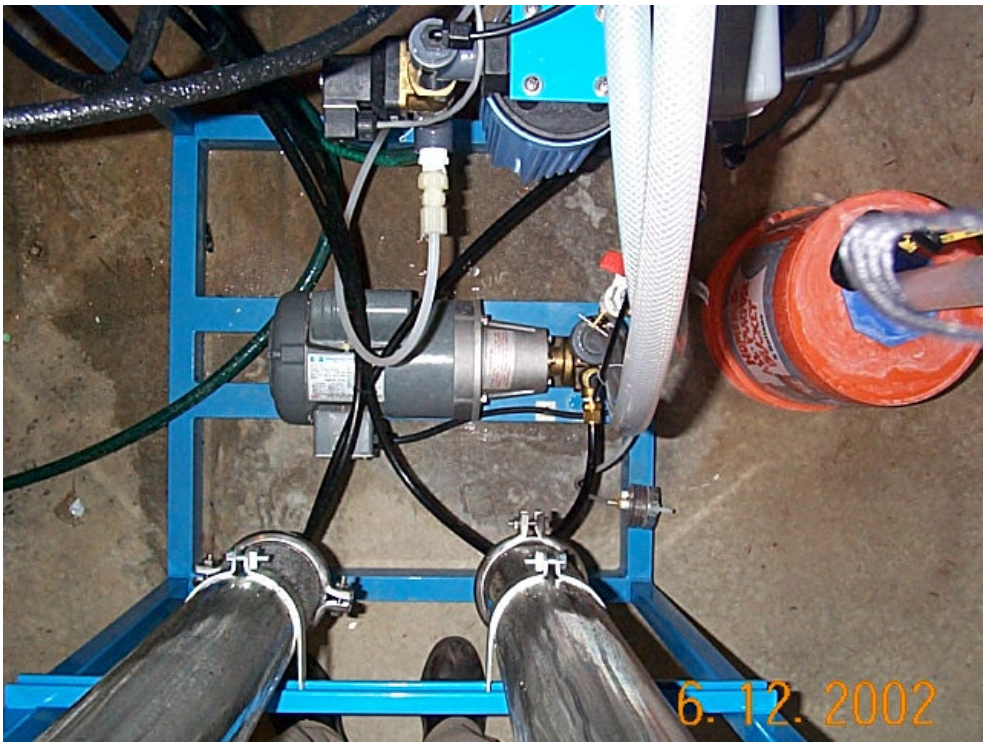

Figure 3. Top View of Membrane Pilot Unit (Vessels and RO Pump)

Figure 4. Side View of Membrane Pilot Unit (Vessels)

Figure 5. Control Panel of Membrane Pilot Unit

Experimental Protocol and Membrane Selection
A minimum of two pilot runs will be performed during the pilot testing period. Two different well groups will be piloted. Each pilot run will last between four to eight weeks, depending upon the results that are obtained, it may be necessary to perform additional pilot testing runs to obtain the information that is necessary for the project.

Design operating conditions listed in this protocol are based on the Filmtec membrane model NF90-4040, which will be used in the study. NF treatment is expected to best meet the City's treated water goals. The NF membranes selected for this project have a high salt, uranium, and total organic carbon (TOC) rejection, however, they allow some monovalent salts to pass to help stabilize the permeate water. In addition, NF membranes have lower operating pressure than RO membranes.

Raw Water Source
The pilot unit will be set up to sample from a minimum of two different alluvial well groups. This can be achieved by locating the pilot unit at the booster pump station building near Site-1, which receives raw water from a north and south collection pipelines. The north pipeline receives raw water from wells 1, 2, 3, 4, 5 and 7 and the south pipeline receives raw water from wells 8, 9 and 10. The pilot unit may also be setup at another well site to sample from the Scalva Wells (Scalva Well 1 or Scalva Well 2). The City is currently installing two taps on the north and south pipelines for the pilot unit and to aid in sampling. These sites represent alluvial water used as raw water supplies for Sterling. The raw water sources to the pilot unit must be chlorine free, as chlorine will destroy the membranes. The pilot unit connection to the raw water system must thus be upstream of chlorination.

Design Operating Points
Target operating points for the pilot are shown in Table 1. The permeate flow rate is based on a flux rate of 20 gal/sf/day (gfd). The flow rates can be adjusted with needle valves provided with the pilot unit.

Table 1 – Pilot Plant Operating Points

Parameter	**Value**
Recovery	83%
Concentrate	0.45 gpm
Permeate	2.3 gpm
Recycle	3.0 to 4.0 gpm

Data Collection
Daily and monthly data collection will be required for the pilot study. Spreadsheet software will be used by Arber to sort the data and prepare customized reports. The data will be analyzed weekly in order to make changes to the operation of the pilot plant or to add or delete requirements to make the study more useful.

The following data will be collected during the pilot study for each of the membranes tested. During all stages of the pilot study, the following data will be recorded twice daily:

1. Silt Density Index (SDI)
2. Feed, permeate, and concentrate pressure (in psi)
3. Feed, permeate, concentrate, and recycle flow rate (gpm)
4. Feed, permeate, and concentrate conductivity (µs/cm)
5. Feed, permeate, and concentrate pH (SU)
6. Feed temperature (^{o}C)

A logbook will be kept by the pilot plant operator using log sheets provided by Arber. In addition to the parameters listed above, the operator will note any abnormalities or comments on the operation of the system.

Samples will be collected for laboratory analysis at the beginning and end of each membrane run. This information helps to provide an indication of membrane performance over time, and allows the pretreatment program to be adjusted as necessary. Samples will be collected from the feed, permeate, and concentrate streams, and analyzed for the following constituents:

1. Major cations
2. Major anions
3. Iron, dissolved and total
4. Manganese
5. Strontium
6. Barium
7. Copper
8. Silica, dissolved and total
9. Uranium
10. Alkalinity
11. Hardness
12. Fluoride
13. Phosphate
14. Nitrate
15. pH
16. Heterotrophic Plate Count
17. Total Organic Carbon
18. UV absorbance at 254 nm
19. Total Dissolved Solids
20. Total Suspended Solids

Samples will be collected by the Arber (or by the City) and transported/shipped to an independent laboratory for analysis.

Daily Operation
It is intended that the pilot plant will be operated continuously throughout the study. The only time that the test should be suspended is when the membranes are changed.

The pilot system will be checked seven days a week, twice per day during weekdays, preferably first thing in the morning and at the end of the workday and once per day during weekends, preferably in the morning. Since the system has no automatic controls, it may be necessary to perform manual adjustments at each visit to return the system to its correct operation.

Operating data should be logged in the logbook before and after adjustment. This will allow evaluation of the amount of off specification operation that has occurred and provide normalized data when the system is operating properly.

At each site visit, the operator shall complete the Operator's Checklist, which is included in the Appendix A. The method for performing the SDI test is included in the Appendix B. Information on the chemical feed concentration and chemical tank is included in Appendix C. An example sample of the pilot log sheet is included in Appendix D. The schedule for visiting the pilot unit and performing tests and recording observations is shown in Appendix E.

Weekly Operation

Arber will visit the pilot plant once every few weeks to perform the following tasks:

1. Review the operating log and discuss observations of the operator.
2. Calibrate scale inhibitor and pretreatment chemical metering pump to the correct flow rate.
3. Repair or adjust any equipment as necessary.
4. Collect logsheets, and/or enter logged data into the computer spreadsheet.
5. Distribute logged data to all interested parties via email or fax.
6. Instruct Sterling's operators about any revised procedures.
7. Collect sample (or instruct operator to collect sample) for laboratory testing (when required).

Contacts

Engineer – Richard P. Arber Associates

Shahnawaz Sinha	Office:	(303) 831-4700
	Cell:	(303) 921-5517

APPENDIX A

OPERATOR CHECKLIST

Complete each item on the checklist each time the pilot plant is visited, unless otherwise noted.

- Note arrival date, day and time in logbook. Note plant status.
- Observe pilot-plant for unusual situations: Shutdowns, pump failure, leaks, broken pipes or valves, system seriously out of configuration, etc. If possible, fix the problem and bring the plant back on line. Otherwise, contact Arber for help. Record anything of interest in the log.
- Adjust concentrate control valve, recycle valve and permeate valve to the flow values listed in Table 1 of the Pilot Study Protocol.
- Begin SDI test (see Appendix B). Record Ti in logbook.
- Record pressures of feed, permeate, and concentrate in the logbook.
- Sample conductivity of feed, permeate, and concentrate and record in the logbook.
- Record feed, permeate, and concentrate pH in the logbook.
- Record feed temperature in the logbook.
- Record feed, permeate, concentrate, and recycle flows in the logbook.
- After 15 minutes, record Tf for SDI test. Calculate SDI, and tape filter paper into logbook per instructions.
- Check scale inhibitor/anit-foulant/pretreatment chemical tank level (inches) with the external sight gauge. If low, mix up new chemical. See chemical feed directions included in Appendix C. Record chemical level on logbook, and note the date and time.
- Record inlet and outlet pressure for the cartridge filter in the logbook. Replace the cartridge filter if pressure difference exceeds 8 psi. Place cartridge filter in a sealed Ziploc bag, record date and time and return to Arber.
- Initial the logbook.

- Note that the pilot unit operation should not show significant changes on a day to day basis. Any significant change in flow rates, pressures, or significant manual adjustments that are required to return the system to its correct operation may indicate a problem with the pilot unit, and the Arber should be contacted immediately.

APPENDIX B

SILT DENSITY INDEX (SDI) TEST PROCEDURE

This is a test to determine an index that is related to the suspended solids in the feed water supplied to the membrane treatment plant, following the cartridge filter. The SDI apparatus is connected to the pilot unit and receives water from the raw water feed inlet line. The apparatus consists of two valves (an isolation valve at inlet line and a pressure adjustment valve within the SDI unit), a pressure gauge, filter housing and a flask. The test procedure is as follows:

1. Unscrew the filter housing. Remove the O-ring gasket from the lower half of the filter housing. Wet the lower half of the filter with permeate.

2. Using tweezers or a similar tool, place a 0.45-micron filter in the lower half of the filter housing. Do not touch the filter; the oil on your fingers will foul it. Wet the filter paper with permeate. Place the O-ring on top of the filter.

3. Screw the lower half of the filter housing onto the rest of the apparatus. Open the isolation valve on the feed line slowly. Let the air out through the bleed valve on the top of filter housing. Close the bleed valve.

4. Adjust the valve on the SDI unit to attain 30 psi of a pressure. Place a graduated flask under the filter housing. Begin tracking the time. Using the graduated flask, measure the time it takes to fill up to 500 mL mark. Record the time as Time Initial (Ti) on the log sheet. Empty the flask. If the initial pressure is significantly different from 30 psi, and takes more than a few seconds to adjust the pressure, restart the test with a new filter after the pressure is properly adjusted.

5. Wait 15 minutes from the last measurement (i.e. Ti). Allow water to continue to flow through the unit during this time. At 15 minutes, place the flask under the filter housing again and record the time it takes to fill the 500 mL flask. Record the time as Time Final (Tf).

6. Close the isolation valve. Unscrew the lower housing again and remove the filter paper using a tweezers. Dry the filter by placing it on a paper towel, face up. Place the dry filter paper in the logbook and tape it down with Scotch Tape. Next to the filter, record the date, time, and calculated SDI.

7. Screw the lower housing back on the apparatus with no filter in it, making sure that the O-ring is in place.

APPENDIX C

CHEMICAL FEED

Scale inhibitor/dispersant/pretreatment chemical helps to prevent mineral scales from biological organisms, organic materials and colloidal from building up on the membrane surfaces. It is necessary that the scale inhibitor be injected at all times when the pilot plant is in operation.

The scale inhibitor solution (Vitec4000) is mixed according to the following ratio: Measure out 23 mL of scale inhibitor per gallon of dilution water. Mix thoroughly, NF permeate water is to be used for dilution water.

The system will use about 3.4 gallons per day of mixed solution. 5 gallons of pretreatment chemical will be provided with the pilot unit. The amount should be enough to last for approximately 8 months of constant operation.

The 25-gallon storage container should be filled to the highest marking (24-inches) as necessary, once per week and on Friday prior to the weekend. Arber will calibrate the flow rate weekly based on operator logs. For a dose of 7.5 mg/L it should be pumping at 9.0 mL/min. The amount of inhibitor needed to dilution water in filling in the tank is shown in the following table.

25 GALLON CHEMICAL FEED TANK

Sterling-New Pilot Unit
Chemical Feed Calulation for Pilot Unit

	7.5	mg/L of each chemical
Water Flow (Q1)=	2	gallon/min
	2,880	gallon/day
Desired Chemical Flow (Q2)=	**3.3**	inches/day
	23	inches/week
	0.1375	inches/hrs
	0.1431	gallon/hrs
	9.01	ml/min
	3.4	gallon/day
Chemical Conc (C2)=	6,290	mg/L
Neat Product (100%) =	1,000,000	mg/L
SG =	1.06	
Concentration =	0.0224	L/gallon
	22.43	ml/gallon

Tank Data

17.5	in diameter
1.669	sf of cross section
1.041	volume of 1" of tank (gallons)

Chemical Addition to Gallon of Water

Water (gallons)	Antiscalant (mL)	Level (inches)
1	**22.4**	0.96
2	**44.9**	1.92
3	**67.3**	2.88
4	**89.7**	3.84
5	**112.1**	4.80
6	**134.6**	5.77
7	**157.0**	6.73
8	**179.4**	7.69
9	**201.9**	8.65
10	**224.3**	9.61
11	**246.7**	10.57
12	**269.2**	11.53
13	**291.6**	12.49
14	**314.0**	13.45
15	**336.4**	14.41
16	**358.9**	15.38
17	**381.3**	16.34
18	**403.7**	17.30
19	**426.2**	18.26
20	**448.6**	19.22
21	**471.0**	20.18
22	**493.5**	21.14
23	**515.9**	22.10
24	**538.3**	23.06
25	**560.7**	24.02

Chemical Tank Drop by hours and Days

Hours Since Fill	Days Since Fill	Drops (inches)
1		0.14
2		0.28
4		0.55
6		0.83
8		1.10
10		1.38
12	1/2-day	1.65
14		1.93
16		2.20
18		2.48
20		2.75
24	1-day	3.30
28		3.85
36		4.95
40		5.50
42		5.78
48	2-day	6.60
50		6.88
60		8.25
68		9.35
72	3-day	9.90
80		11.00
96	4-day	13.20
108		14.85
120	5-day	16.50

APPENDIX D

SAMPLE LOG SHEET ATTACHED

APPENDIX E

PILOT SCHEDULE FOR OPERATOR CHECK

Days	AM	PM
Monday	Sterling*	Sterling
Tuesday	Sterling	Sterling
Wednesday	Sterling	Sterling
Thursday	Sterling	Sterling
Friday	Sterling*	Sterling
Saturday	Sterling	-
Sunday	Sterling	-

***Please fill up the chemical feed tank**

Water Quality Sampling Data
Site1 RO Summary

		WQ				
Parameter[1]	Units	Raw	Perm	Conc.	Multiplier	% Removal
Alkalinity	(mg/L CaCO3)	238	22	1,190	5	91%
Aluminum	(ug/L)	u	u	u	-	-
Ammonia N	(mg/L)	u	u	u	-	-
Antimony	(ug/L)	u	u	u	-	-
Arsenic	(ug/L)	5	u	24	5	100%
Barium	(ug/L)	78	u	335	4	100%
Beryllium	(ug/L)	u	u	u	-	-
Boron	(mg/L)	0.209	u	0.273	1	100%
Bromide	(ug/L)	501	169	2,100	4	66%
Cadmium	(ug/L)	u	u	u	-	-
Calcium	(mg/L)	155	9	814	5	94%
Chloride	(mg/L)	75	19	344	5	75%
Chromium	(ug/L)	u	u	u	-	-
Chromium(+3 and +6)	(ug/L)				-	-
Cobalt	(ug/L)					
Copper	(ug/L)	u	u	42	-	-
Cyanide	(ug/L)					
Fluoride	(mg/L)	0.68	u	2.70	4	100%
Hardness	(mg/L CaCO3)	550	30	2,900	5	95%
Iron Dissolved	(ug/L)	u		u	-	-
Lead	(ug/L)	2.3	1.5	6.8	3	34%
Lithium	(ug/L)					
Magnesium	(mg/L)	41	2	207	5	95%
Manganese	(ug/L)	20	8	50	2	63%
Mercury	(ug/L)	u	u	u	-	-
Molybdenum	(ug/L)					
Nickel	(ug/L)	u	u	16	-	-
Nitrate as N	(mg/L)	4	3	9	2	26%
Nitrite as N	(mg/L)	u	u	u	-	-
Ortho-P as P	(mg/L)	u	u	1.0	-	-
pH	(SU)	7.4	6.6	7.8	-	-
Potassium	(mg/L)	10	2	46	5	81%
Selenium	(ug/L)	5.3	u	24.8	5	100%
Silicon (dissolved as SiO2)	(mg/L)	37	5	172	5	87%
Silver	(ug/L)	u	u	u	-	-
Sodium	(mg/L)	120	23	561	5	81%
Strontium	(ug/L)	1,100	u	6,090	6	100%
Sulfate	(mg/L)	512	24	2,710	5	95%
Sulfide	(mg/L)	u	u	u	-	-
SUVA	(L./mg-m)	1.9	u	1.7	-	-
TDS	(mg/L)	1,170	124	5,670	5	89%
Thallium	(ug/L)	u	u	u	-	-
TOC	(mg/L)	2.4	u	14.8	6	100%
Total Iron	(ug/L)	524	u	2,540	5	100%
TP as P	(mg/L)	u	u	1.1	-	-
TSS	(mg/L)	u	u	u	-	-
Turbidity	(NTU)	0.7	0.5	0.8	1	28%
Uranium	(ug/L)	31	2	157	5	95%
UV Absorbance@254 nm	(1/m)	4.6	u	25.1	5	100%
Zinc	(ug/L)	30	34	48	2	-12%
Americium	(pCi/L)	-	-	-	-	-
Cesium 134	(pCi/L)	-	-	-	-	-
Plutonium 239 and 240	(pCi/L)	-	-	-	-	-
Radium 226 and 228	(pCi/L)	-	-	-	-	-
Strontium 90	(pCi/L)	-	-	-	-	-
Thorium 230 and 232	(pCi/L)	-	-	-	-	-
Tritium	(pCi/L)	-	-	-	-	-

Notes:

[1]Measured as total or otherwise noted

[2]TR Total recoverable metals means portion of the water and suspended sediments sample measured by total recoverable analytical procedure

Sample Date	Pilot Location	Sampled at:	Pretreatment Chemicals
2/25/2009	Site1	Booster Station	Vitec4000

Water Quality Sampling Data
Scalva1 RO Summary

		WQ				
Parameter[1]	Units	Raw	Perm	Conc.[3]	Multiplier	% Removal
Alkalinity	(mg/L CaCO3)	261	9.79	1,190	5	96%
Aluminum	(ug/L)	u	u	u	-	-
Ammonia N	(mg/L)	u	u	u	-	-
Antimony	(ug/L)	u	u	u	-	-
Arsenic	(ug/L)	u	u	5.8	-	-
Barium	(ug/L)	34	u	172	5	100%
Beryllium	(ug/L)	u	u	u	-	-
Boron	(mg/L)	0.414	0.38	0.59	1	8%
Bromide	(ug/L)	808	195	2,900	4	76%
Cadmium	(ug/L)	u	u	u	-	-
Calcium	(mg/L)	246	1.26	1,240	5	99%
Chloride	(mg/L)	130	23.3	551	4	82%
Chromium	(ug/L)	u		u	-	-
Chromium(+3 and +6)	(ug/L)				-	-
Cobalt	(ug/L)					
Copper	(ug/L)	u	u	13	-	-
Cyanide	(ug/L)	u	u	u	-	
Fluoride	(mg/L)	1.2	u	3.9	3	100%
Hardness	(mg/L CaCO3)	970	4.3	4,900	5	100%
Iron Dissolved	(ug/L)	u	u	418	-	-
Lead	(ug/L)	u	u	u	-	-
Lithium	(ug/L)					
Magnesium	(mg/L)	87	0.3	433	5	100%
Manganese	(ug/L)	758	u	3,840	5	-
Mercury	(ug/L)	u	u	u	-	-
Molybdenum	(ug/L)					
Nickel	(ug/L)	u	u	33	-	-
Nitrate as N	(mg/L)	u	0.0133	u	-	-
Nitrite as N	(mg/L)	u	u	u	-	-
Ortho-P as P	(mg/L)	u	u	u	-	-
pH	(SU)	7.36	6.15	7.7	-	-
Potassium	(mg/L)	25	1.8	113	5	93%
Selenium	(ug/L)	2.2	u	12	5	100%
Selenium (Dissolved)	(mg/L)	3	u	13	4	100%
Silicon (dissolved as SiO2)	(mg/L)	13	1.1	56	4	92%
Silver	(ug/L)	u	u	u	-	-
Sodium	(mg/L)	276	19.7	1,200	4	93%
Strontium	(ug/L)	2.2	u	11.6	5	100%
Sulfate	(mg/L)	1,170	3.2	5,740	5	100%
Sulfide	(mg/L)	u	u	u	-	-
SUVA	(L./mg-m)	1.6		1.5	-	-
TDS	(mg/L)	2,220	60	10,500	5	97%
Thallium	(ug/L)	u	u	u	-	-
TOC	(mg/L)	4.1	u	21.1	5	100%
Total Iron	(ug/L)	1,950	u	10,100	5	100%
TP as P	(mg/L)	u	u	0.5	-	-
TSS	(mg/L)	u	u	u	-	-
Turbidity	(NTU)	4.81	0.12	5.33	1	97%
Uranium	(ug/L)	36	u	178	5	-
UV Absorbance@254 nm	(1/m)	6.7	0.5	30.8	5	100%
Zinc	(ug/L)	9.9	u	23.6	2	-
Americium	(pCi/L)				-	-
Cesium 134	(pCi/L)				-	-
Plutonium 239 and 240	(pCi/L)				-	-
Radium 226 and 228	(pCi/L)				-	-
Strontium 90	(pCi/L)				-	-
Thorium 230 and 232	(pCi/L)				-	-
Tritium	(pCi/L)				-	-

Notes:

[1]Measured as total or otherwise noted

[2]TR Total recoverable metals means portion of the water and suspended sediments sample measured by total recoverable analytical procedure

Sample Date	Pilot Location	Sampled at:	Pretreatment Chemicals
3/25/2009	Scalva1	Scalva1	Vitec4000

Bench-Scale Protocol For
Raw Water and Membrane Concentrate Discharge
City of Sterling, CO
February, 2009

Background

The City of Sterling is currently performing preliminary design for treatment facilities that will allow the City to meet primary drinking water standards. Several treatment options were considered for Sterling, their advantages and disadvantages along with estimated capital costs were presented to the City in a report titled *Water Treatment System – Project Criteria and Process Selection*.

Conventional coagulation/filtration and membrane treatment options are among the few considered to be effective for Sterling. The conventional coagulation/filtration option was recently evaluated under the CO-RADs study. Coagulation/filtration is effective in addressing only the primary contaminants (uranium and DBP precursors) while the membrane treatment option is effective for addressing both primary as well as secondary contaminants (e.g., hardness, sulfate and TDS from the raw water). Sterling preferred the membrane option, as it addresses both contaminants and positions the City to meet the current and future drinking water regulations and standards.

The membrane treatment option will be evaluated at pilot-scale level, while the coagulation/filtration option will be evaluated at bench-scale level. Both treatment options will be evaluated for their effectiveness for Sterling's raw water. This bench-scale study will be more comprehensive than the previous CO-RADs study. Several raw water sources with several types of coagulants will be tested during this study. This study will address the quantity and quality of waste/sludge produced, and its disposal option available for the Residual Management Plan (RMP).

In addition to source water evaluation, this study will also evaluate the effectiveness of coagulation/filtration for treating membrane concentrate water. The membrane concentrate water will be generated at a pilot-plant in Sterling. The membrane concentrated water is expected to be 4 to 6 times more concentrated than raw water. The membrane concentrate may not be allowed to discharge to nearby water bodies (or sent to the wastewater treatment plant) unless treated. Untreated membrane concentrate water may exceed the discharge limit set by CDPHE. Membrane concentrate water will be treated at bench-scale level and will be compared against the discharge limit set by CDPHE.

Objective

The specific treatment objectives for the bench-scale study will be to evaluate the performance of the coagulation-filtration process for raw water and membrane

concentrated water. In addition, the bench-scale data will be gathered to establish the following:

1. Effective coagulant dose and coagulant type for both source and membrane concentrated water.
2. Optimal coagulation condition (in terms of coagulating pH) for raw water sources only.
3. Characterization of raw water, membrane concentrates and finished water in terms of primary and well as secondary contaminants.
4. Percent removal of various contaminants, including turbidity (if present), uranium and dissolved organic carbon (DOC) (i.e., DBP precursors) from the raw water.
5. Percent reduction in metals/anion content for the membrane concentrate (as part of the discharge limit) water.
6. Assessment of DBP formation for the source and coagulated/filtered finished water by simulating distribution system and by performing 2-day and 5-day Simulated Distribution System (SDS) condition.

Description of Bench-Scale Study

A six-paddle gang jar tester will be used along with several other pieces of equipment in conducting the above bench-scale study. Equipment needed for the bench-scale study will include the following:

- One - six paddle gang jar-tester
- Six - rectangular 2-L beakers
- One - handheld pH probe
- One - handheld conductivity probe
- One - bench-top turbidity meter with turbidity standards
- One - 1000 µl pipette
- Several rectangular weighing dishes (for coagulant dosing)
- One - vacuum pump
- One - filter housing
- Several 0.45 µm filters
- One - 100-ml burette
- One – bottle of 100-ml bromocresol indicator (for alkalinity measurement)
- Chemical - Coagulants (alum and Polyaluminum chloride-PACl)
- 25 to 30 gallons of raw water
- 10-20 gallon of membrane concentrate water
- Sample bottles and coolers

A series of jar-tests will be conducted on raw water and membrane concentrate water. The purpose of this bench-scale study, as mentioned above, will be to evaluate effectiveness of coagulant in treating raw water and membrane concentrate water in removing various contaminants.

Conventional coagulants, such as alum and ferric chloride will be evaluated along with an alternative coagulant, polyaluminum chloride (PACl). Small to moderate coagulant doses (ranging from 5 to100 mg/L) will be necessary for reducing primary contaminants (uranium, DBP precursors) from source water, while elevated amounts of coagulant doses (100 to 300 mg/L) will be necessary for treating the membrane concentrate water in meeting the discharge limits.

Alum is chosen for the bench-scale study, as alum is a commonly used coagulant in water treatment. Many water treatment plants throughout Colorado use alum as the primary coagulant. Alum is known to be effective in removing turbidity, dissolved organic matter and uranium. Ferric chloride is a second commonly used conventional coagulant. Ferric chloride is known to be effective in removing dissolved organic matter and removing uranium from raw water. The alternative coagulant, PACl is less commonly used, but is selected for this study to evaluate its effectiveness in treating Sterling's raw water sources. The quantity and quality of organic matter present in source water plays a critical role to overall performances of these coagulants. The organic matter present in Sterling's sources is not well defined or well understood due to limited water quality data. Thus, all three coagulants will be tested for use on these sources to select an effective coagulant for Sterling.

Only alum, at two different dosages (100 mg/L and 300 mg/L), will be tested for membrane concentrate water. Ferric chloride will not be tested, as an elevated amount of ferric chloride can lead to coloration and could pose a discharge challenge. The PACl will not be tested, as treating the membrane concentrate may require elevated amounts of PACl, which may not be an economical option (as PACl is 4 to 5 times more expensive than alum or ferric chloride). The membrane concentrate water will be characterized before and after treatment in terms of its metals and anion content to allow comparison with the CDPHE discharge limits.

Raw Water Source

The bench-scale study will be conducted for a minimum of two different source waters. One raw water sample will be collected from the booster pump station building at Site-1, which receives raw water from wells 1, 2, 3, 4, 5 and 7. The second raw water sample will be collected from the Scalva wells (preferably Scalva Well-1), which tend to have a higher uranium and DBP precursor level. Bench-scale tests for the Scalva well will represent the worse case scenario. The raw water sources used for the bench-scale study must be unchlorinated, and thus raw water samples will be collected from upstream of the point of chlorination.

Membrane Concentrate

The membrane concentrate water sample will be collected from the pilot plant at Site-1. The membrane concentrate water will be coagulated at bench-scale level using alum at two different dosages as mentioned above.

Design Operating Points
Several conditions will be tested during this bench-scale study to effectively remove uranium and DBP precursors from Sterling's source water and to meet discharge limits for the membrane concentrate water. The following table shows the bench-scale operating conditions for the raw and membrane concentrate water.

Table 1 – Bench-scale Operating Conditions

Parameter	Raw Water	Membrane Concentrate
Sources	Site-1 and Scalva Well-1	Site-1
Coagulant type	Alum, Ferric chloride and PACl	Alum
Coagulant dose	5-100 mg/L	100 and 300 mg/L
Coagulant pH	Ambient and optimal pH condition*	Ambient pH condition

Note:
*Optimal pH scans for Scalva Well-1 only; this will provide optimal pH for uranium and DOC removal.

Experimental Protocol on Coagulant and Dose Selection
The bench-scale tests will be conducted at Sterling's Water Quality Lab. Arber will require access to the lab and to bench-scale equipments, such as a turbidity meter, vacuum pump and lab space during testing. Arber will also require operator assistance in collecting raw water (25-30-gallon) samples from each designated sources. Arber will collect membrane concentrate water from the pilot plant. This bench-scale study will require refrigeration space to store samples after testing.

A total of nine (9) jar tests will be conducted during this study as shown below. Among them, seven (7) jar-tests will be conducted on raw water from two different sources and two (2) sets of jar-tests will be conducted at two different dosages on the membrane concentrate water, as listed below:

1. Site1- Alum test: Dose scan from 0 to 100 mg/L at ambient pH
2. Site1- Ferric test: Dose scan from 0 to 100 mg/L at ambient pH
3. Site1- PACl test: Dose scan from 0 to 75 mg/L at ambient pH

4. Scalva Well1- Alum test: Dose scan from 0 to 100 mg/L at ambient pH
5. Scalva Well1- Ferric test: Dose scan from 0 to 100 mg/L at ambient pH
6. Scalva Well1- PACl test: Dose scan from 0 to 75 mg/L at ambient pH
7. Scalva Well1: Optimal pH with alum: pH scan from 5.5 to 8.0 (at optimal dose)

8. Membrane concentrate: Alum at a dose of 100 mg/L and
9. Membrane concentrate: Alum at a dose of 300 mg/L

Prior to the jar-testing, all of the paddles and beakers will be cleaned with distilled water to remove any debris or coagulant residue from previous testing. The beakers will be

filled with raw water to the 2-L mark. Paddle will be lowered and a three (3)-stage tapered coagulation/flocculation will be performed in the following sequence:

1. Rapid mix: 100 rpm for 1 minute
2. Flocculation-1: slow mixing at 60 rpm for 10 minutes
3. Flocculation-2: slow mixing at 40 rpm for 10 minutes
4. Flocculation-3: slow mixing at 10 rpm for 10 minutes
5. Settling: No mixing (lift peddles) settling for 30 minutes

After 30-minutes of settling, settled water will be filtered through 0.45 µm filters. During jar-testing, samples will be analyzed for both field analyses (i.e., measured during the bench-scale study at the lab) as well as lab analyses (sample to be measured by outside lab). Filtered water samples and raw water (i.e., source and membrane concentrate waters) samples will be collected in appropriate sample bottles for lab analysis.

Data Collection

Data collected during the bench-scale study will be logged electronically using MS-Excel. The following water quality will be analyzed during the testing:

1. pH: Initial (during rapid mixing) and final (during final flocculation)
2. Conductivity: Initial (during rapid mixing) and final (during final flocculation)
3. Alkalinity: Raw and optimally treated settled water (before filtration)
4. Turbidity: After 30-minutes of settling (before filtration)
5. Floc condition: During last stage of flocculation (i.e., Flocculation-3)

Samples will also be collected for laboratory analysis in appropriate sample bottles and will be sent to labs by overnight delivery. Both raw and filtered water samples will be analyzed and will include the following:

1. Uranium
2. Total or Dissolved Organic Carbon (DOC)
3. UV absorbance - UV254
4. Total Dissolved Solids (TDS) (collected after the jar-test)
5. 2-day and 5-day SDS Test: A 2-day and 5-day Simulated distribution system for TTHM formation (at pH 8.0, ambient temp, chlorine residuals ± 0.5 mg/L as free chlorine at end of incubation)
6. Raw and treated water quality profile for metal and anion analysis

Samples will be collected during the bench-scale study and will be sent to independent laboratories (Evergreen and MWH for SDS test) for analysis. The total number of samples collected for bench-scale testing and total estimated analytical costs are shown in Table 2.

Table 2 – Bench-scale Testing Sampling Totals and Costs

Parameters	Source[1]	Well Water			Memb. Conc.	Total	Costs	
		Alum[2]	$FeCl_3$[3]	PACl[3]	Alum[4]		Unit	Total
Field Measurements								
pH	3	18	12	12	6	48	-	-
Temperature	3	-	-	-	-	3	-	-
Conductivity	3	-		-	6	9	-	-
Alkalinity	3	3	2	2	2	12	-	-
Turbidity	3	18	12	12	6	48		-
Lab Measurements								
DOC	3	18	12	12	2	47	$50	$2,350
UV254	3	2	2	2	2	15	$50	$750
Uranium	3	18	12	12	2	47	$28	$1,316
2-day TTHM	3	2	-	-	-	5	$150	$750
5-day TTHM	-	2	-	-	-	2	$150	$300
Complete water profile[5]	3	2	2	2	2	11	$700	$7,700
							TOTAL ~	**$13,166**

Note:

[1] Total of three (3) sources of which two are raw water sources (Site-1 and Scalva-1) and one is membrane concentrate water (from pilot at Site-1)

[2] Three (3) sets of jar-test with two dose scans and one pH scan

[3] Two (2) sets of jar-tests with dose scan only

[4] Two (2) sets of jar-tests with dose scan; each test is conducted with three (3) jars only

[5] Raw and treated water profiles in terms of complete metals and anions analysis for the two raw water sources (Site-1 and Scalva Well-1) and membrane concentrate water (at two different alum dosages).

Contacts

Engineer – Richard P. Arber Associates

Shahnawaz Sinha Office: (303) 831-4700
Cell: (303) 921-5517

City of Sterling
Jar-Test Results

Richard P. Arber Associates

Date	Tests	Source	Coagulant Used	Jars	Amt of water to Jars	Targeted Coag Dose	% 2.0 Coag Used	Amt Coag Added	Balanced Water	Temp	Initial pH	Final pH	Alkalinity	Cond	Turbidity	UV254	DOC	Uranium	UV254	DOC	Uranium	Floc Observation
					(ml)	(mg/L)	(mg/L)	(ml)	(ml)	(oC)	SU	SU	(mg/L as CaCO3)	(mS/cm)	(NTU)	(1/m)	(mg/L)	(ug/L)	(%)	(%)	(%)	(Visual observation on floc type)
		Raw								16.4	7.23		259	2,110	4.9	6.00	4.6	36				
2/24/2009	A1	Scalva1	Alum	1	2,000	5	20,000	0.5	9.5		7.17			2,090	3.1	6.00	4.7	37	0%	-2%	-3%	No flocs
	A2	Scalva1	Alum	2	2,000	10	20,000	1.0	9.0		7.17			2,060	3.0	6.00	4.3	34	0%	7%	6%	Lots of small/hard to see pin sized flocs
	A3	Scalva1	Alum	3	2,000	15	20,000	1.5	8.5		7.17			2,110	3.4	6.00	4.4	38	0%	4%	-6%	More denser/pin sized flocs
	A4	Scalva1	Alum	4	2,000	30	20,000	3.0	7.0		7.17			2,080	3.9	6.00	4.2	34	0%	9%	5%	Very dense/pin-sized flocs
	A5	Scalva1	Alum	5	2,000	50	20,000	5.0	5.0		7.07			2,130	3.7	5.80	4.2	31	3%	9%	14%	Dense but slightly cloudy flocs
	A6	Scalva1	Alum	6	2,000	75	20,000	7.5	2.5		7.04			2,170	4.9	5.60	4.3	31	7%	7%	14%	Dense but slightly cloudy flocs
2/25/2009	J1	Scalva1	Alum-OP	1	2,000	35	20,000	3.5	6.5		7.58	7.56	233	2,100	3.9	5.80	4.9	33	3%	-7%	8%	Very small/hard to see/pin-sized flocs
	J2	Scalva1	Alum-OP	2	2,000	35	20,000	3.5	6.5													Very small/hard to see/pin-sized flocs
	J3	Scalva1	Alum-OP	3	2,000	35	20,000	3.5	6.5													Very small/hard to see/pin-sized flocs
	J4	Scalva1	Alum-OP	4	2,000	35	20,000	3.5	6.5													Very small/hard to see/pin-sized flocs
	J5	Scalva1	Alum-OP	5	2,000	35	20,000	3.5	6.5													Very small/hard to see/pin-sized flocs
	J6	Scalva1	Alum-OP	6	2,000	35	20,000	3.5	6.5													Very small/hard to see/pin-sized flocs
2/24/2009	B1	Scalva1	PACl	1	2,000	2.5	20,000	0.3	9.8		7.66	7.73		2,000	3.2		4.3	37		7%	-3%	No visible flocs
	B2	Scalva1	PACl	2	2,000	5	20,000	0.5	9.5		7.60	7.65		2,080	3.4		4.4	36		4%	-1%	No visible flocs
	B3	Scalva1	PACl	3	2,000	10	20,000	1.0	9.0		7.56	7.63		2,090	3.6		4.3	32		7%	11%	Not so dense/few pin sized flocs
	B4	Scalva1	PACl	4	2,000	15	20,000	1.5	8.5		7.54	7.61		2,070	3.9		4.2	29		9%	20%	More denser/pin-sized flocs/but hard too see
	B5	Scalva1	PACl	5	2,000	25	20,000	2.5	7.5		7.50	7.58		2,000	4.4		4.2	24		9%	34%	Lots of pin sized flocs
	B6	Scalva1	PACl	6	2,000	50	20,000	5.0	5.0		7.48	7.50		2,000	3.3		4.1	14		11%	60%	Dense pin-sized flocs
2/24/2009	C1	Scalva1	FeCl3	1	2,000	5	20,000	0.5	9.5		7.77	7.45		2,000	3.9		4.7	34		-2%	6%	Lots of pin-sized flocs
	C2	Scalva1	FeCl3	2	2,000	10	20,000	1.0	9.0		7.64	7.41		2,100	4.3		4.2	35		9%	3%	Lots of pin-sized flocs
	C3	Scalva1	FeCl3	3	2,000	15	20,000	1.5	8.5		7.55	7.38		2,060	4.6		4.2	33		9%	8%	Lots of pin-sized flocs
	C4	Scalva1	FeCl3	4	2,000	30	20,000	3.0	7.0		7.41	7.32		2,110	5.1		4.1	32		11%	12%	Lots of pin-sized flocs/slightly yellowish tint
	C5	Scalva1	FeCl3	5	2,000	50	20,000	5.0	5.0		7.35	7.25		2,140	6.3		4.0	28		13%	22%	Lots of pin-sized flocs/More yellowish tint
	C6	Scalva1	FeCl3	6	2,000	75	20,000	7.5	2.5		7.29	7.17		2,120	9.1		3.7	25		20%	31%	Lots of pin-sized flocs/Dark yellowish tint
2/25/2009	H1	Scalva1	FeCl3-OP	1	2,000	30	20,000	3.0	7.0		7.65	7.52	223	2,000	1.7	5.70	4.6	28	5%	0%	23%	Good flocs/Dense/yellowish color
	H2	Scalva1	FeCl3-OP	2	2,000	30	20,000	3.0	7.0													Good flocs/Dense/yellowish color
	H3	Scalva1	FeCl3-OP	3	2,000	30	20,000	3.0	7.0													Good flocs/Dense/yellowish color
	H4	Scalva1	FeCl3-OP	4	2,000	30	20,000	3.0	7.0													Good flocs/Dense/yellowish color
	H5	Scalva1	FeCl3-OP	5	2,000	30	20,000	3.0	7.0													Good flocs/Dense/yellowish color
	H6	Scalva1	FeCl3-OP	6	2,000	30	20,000	3.0	7.0													Good flocs/Dense/yellowish color
		Raw								15.2				1,499	0.2	4.85	2.9	34				
2/25/2009	D1	Site1	Alum	1	2,000	5	20,000	0.5	9.5		7.76	7.62		1,369	0.3		3.1	34		-7%	-1%	Not much of floc formation
	D2	Site1	Alum	2	2,000	10	20,000	1.0	9.0		7.64	7.59		1,418	0.5		2.9	31		0%	7%	Small pin-sized flocs
	D3	Site1	Alum	3	2,000	15	20,000	1.5	8.5		7.55	7.57		1,407	1.1		2.9	32		0%	4%	Small pin-sized flocs/denser flocs
	D4	Site1	Alum	4	2,000	30	20,000	3.0	7.0		7.48	7.54		1,469	1.2		2.8	31		3%	7%	Lots of small pin-sized flocs
	D5	Site1	Alum	5	2,000	50	20,000	5.0	5.0		7.40	7.48		1,476	1.5		2.7	29		7%	13%	Lots of small pin-sized flocs
	D6	Site1	Alum	6	2,000	75	20,000	7.5	2.5		7.31	7.43		1,481	1.1		2.7	26		7%	22%	Lots of small pin-sized flocs
2/25/2009	E1	Site1	PACl	1	2,000	2.5	20,000	0.3	9.8		7.75	7.69		1,376	0.6		2.9	29		0%	14%	No visible flocs
	E2	Site1	PACl	2	2,000	5	20,000	0.5	9.5		7.64	7.66		1,433	0.8		2.8	27		3%	19%	No visible flocs
	E3	Site1	PACl	3	2,000	10	20,000	1.0	9.0		7.60	7.64		1,457	1.4		2.9	23		0%	32%	Very small, and not so dense flocs
	E4	Site1	PACl	4	2,000	15	20,000	1.5	8.5		7.58	7.63		1,472	1.8		3.1	19		-7%	43%	Very small, and not so dense flocs
	E5	Site1	PACl	5	2,000	25	20,000	2.5	7.5		7.55	7.61		1,498	2.3		2.7	14		7%	60%	Very small, and not so dense flocs
	E6	Site1	PACl	6	2,000	50	20,000	5.0	5.0		7.53	7.59		1,467	2.8		2.6	6		10%	81%	Small pin-sized flocs
2/25/2009	F1	Site1	FeCl3	1	2,000	5	20,000	0.5	9.5		7.86	7.70		1,366	1.8		2.9	33		0%	3%	Not much of flocs
	F2	Site1	FeCl3	2	2,000	10	20,000	1.0	9.0		7.74	7.64		1,424	1.7		3.0	32		-3%	5%	Small pin-sized flocs
	F3	Site1	FeCl3	3	2,000	15	20,000	1.5	8.5		7.60	7.58		1,400	1.2		3.0	33		-3%	3%	Lots of small pin-sized flocs
	F4	Site1	FeCl3	4	2,000	30	20,000	3.0	7.0		7.43	7.46		1,464	1.7		2.7	31		7%	9%	Yellowish tint/small pin-sized flocs
	F5	Site1	FeCl3	5	2,000	50	20,000	5.0	5.0		7.38	7.36		1,489	1.7		2.5	29		14%	14%	Darker yellowish tint/ pin-sized flocs
	F6	Site1	FeCl3	6	2,000	75	20,000	7.5	2.5		7.27	7.25		1,503	2.4		2.5	20		14%	40%	Darker yellowish tint/ pin-sized flocs
2/25/2009	I1	Site1	FeCl3-OP	1	2,000	40	20,000	4.0	6.0		7.55		193	1,363	5.1	3.80	3.1	28		-7%	18%	Nice lots of pin-sized flocs
	I2	Site1	FeCl3-OP	2	2,000	40	20,000	4.0	6.0													Nice lots of pin-sized flocs
	I3	Site1	FeCl3-OP	3	2,000	40	20,000	4.0	6.0													Nice lots of pin-sized flocs
	I4	Site1	FeCl3-OP	4	2,000	40	20,000	4.0	6.0													Nice lots of pin-sized flocs
	I5	Site1	FeCl3-OP	5	2,000	40	20,000	4.0	6.0													Nice lots of pin-sized flocs
	I6	Site1	FeCl3-OP	6	2,000	40	20,000	4.0	6.0													Nice lots of pin-sized flocs
		Raw								16.8	7.62			3,770	1.5		14.8	157				
2/25/2009	G1	Site1-ROCONC	Alum	1	2,000	100	606,667	0.33	9.7		7.35	7.13		3,700	3.3		12.8	148		14%	6%	Lots of large /dense flocs
	G2	Site1-ROCONC	Alum	2	2,000	250	606,667	0.82	9.2		7.12	7.09		3,950	7.7		11.9	144		20%	8%	Lot more denser flocs
	G3	Site1-ROCONC	Alum	3	2,000	500	606,667	1.65	8.4		6.88	6.85		4,010	17.5		11.1	132		25%	16%	Lot more denser flocs but white cloudier flocs
	G4	Site1-ROCONC	FeCl3	4	2,000	100	557,257	0.36	9.6		7.15	7.09		4,050	16.6		12.3	139		17%	11%	Lots of flocs/yellowish in color
	G5	Site1-ROCONC	FeCl3	5	2,000	250	557,257	0.90	9.1		6.99	6.94		4,020	28.7		11.1	131		25%	17%	Lots of flocs/Reddish yellowish in color
	G6	Site1-ROCONC	FeCl3	6	2,000	500	557,257	1.79	8.2		6.60	6.57		4,130	50.7		10.1	105		32%	33%	Lots of flocs/Dark reddish yellowish in color

MIEX® RESIN TREATABILITY STUDY FOR REMOVAL OF DISSOLVED ORGANIC CARBON, URANIUM, AND BROMIDE FROM SCALVA-1 WELL WATER

Sterling, CO

DOCUMENT NO: LR-2009-11

Prepared By:	Orica Watercare, Inc.	Beth Stinson (303) 268-5108	04/08/09
Authorized for Issue By:	Orica Watercare, Inc.	Barbara Martin (303) 268-5061	04/13/09
Distribution:	Shahnawaz Sinha, Richard P. Arber Associates Gregg McLeod, Hydrologx		04/21/09
Revision #		0	

This document is subject to copyright and is confidential. It must not be reproduced, stored in a retrieval system, transmitted or lent in any form or by any means without the consent of Orica Watercare Inc. MIEX® is Registered, U.S. Patent and Trademark Office

TABLE OF CONTENTS

1.0 INTRODUCTION 1

2.0 RAW WATER CHARACTERISTICS 3

3.0 BATCH TESTING PROCEDURES 4
- **3.1 MIEX® RESIN PREPARATION** 4
- **3.2 MIEX® RESIN BATCH TEST** 4
- **3.3 CONVENTIONAL COAGULATION EVALUATION** 5
- **3.4 COMBINED TREATMENT EVALUATION** 5

4.0 MIEX® TREATMENT RESULTS 6
- **4.1 DOC REMOVAL** 6
- **4.3 URANIUM REMOVAL** 7
- **4.4 BROMIDE REMOVAL** 9

4.5 MIEX® RESIN TREATMENT SUMMARY 9

5.0 COAGULANT CONTROL RESULTS 10
- **5.1 DOC REMOVAL** 10
- **5.2 URANIUM REMOVAL** 12

6.0 COAGULATION FOLLOWED BY MIEX® RESULTS 12
- **6.1 DOC REMOVAL** 12
- **6.2 URANIUM REMOVAL** 13
- **6.3 BROMIDE REMOVAL** 14

7.0 MIEX® FOLLOWED BY COAGULATION RESULTS 15
- **7.1 DOC REMOVAL** 15
- **7.2 URANIUM REMOVAL** 16

8.0 DISINFECTION BY-PRODUCT REDUCTIONS 16

8.0 CONCLUSIONS 18

9.0 RECOMMENDATIONS 19

LIST OF TABLES

Table 1: Raw Water Characterization and Analytical Methods 3
Table 2: MIEX® Resin Test Results 7
Table 3: MIEX® Resin Test Results for Uranium Removal 8
Table 4: MIEX® Resin Test Results for Bromide Removal 9
Table 5: Coagulant Control Results - Alum 10
Table 6: Coagulant Control Results - Ferric Chloride 11
Table 7: MIEX® Resin/Coag Test Results for Uranium Removal 12
Table 8: Coagulation Followed by MIEX® Resin Pre-Treatment 13
Table 9: Coagulation Followed by MIEX® Resin Treatment Uranium Removal 14

Table 10: Coagulation Followed by MIEX® Resin Pre-Treatment Bromide Removal….14
Table 11: MIEX® Resin Followed by Coagulation Results……..15
Table 12: MIEX® Resin Followed by Coagulation Results for Uranium Removal…….16
Table 13: SDS TTHM Incubation Conditions……..,,17
Table 14: SDS TTHM Formation Potential Test Results……..17

LIST OF FIGURES

Figure 1: DOC Versus Bed Volume Treatment Rate 6
Figure 2: Uranium (µg/L) Versus Bed Volume Treatment Rate 8
Figure 3: Bromide (µg/L) Versus Bed Volume Treatment Rate 9

LIST OF ACRONYMS & DEFINITIONS

BV	Bed Volume
DBP	Disinfection By Products
DOC	Dissolved Organic Carbon
EPA	Environmental Protection Agency
GPM	Gallons per Minute
HAA5	Haloacetic Acids total of 5 Regulated
PPM	parts per million
SDS	Simulated Distribution System
WTP	Water Treatment Plant
TOC	Total Organic Carbon
TTHM	Total Trihalomethanes
UVA	UV_{254} Absorbance

DEFINITIONS

Regenerate – A process of mixing loaded resin with a brine solution to exchange organics and replace them with chloride ions

Fresh Resin – MIEX® Resin that has been previously used and been regenerated

Virgin Resin – New resin that has not previously been exposed to raw or treated water

Bed Volume – Volumetric ratio of treated water to resin (see example below).

Bed Volume Example Calculation

Volume of Water to be Treated	$V_1 := 1000\,mL$	
Voume of Resin Used for Treatment	$V_2 := 5 \cdot mL$	
Bed Volume Calculation	$BV := \frac{V_1}{V_2}$	$BV = 200$

1.0 Introduction

The City of Sterling, in conjunction with Richard P. Arber Associates, is currently investigating treatment options to reduce disinfection by-product (DBP) formation in order to meet the requirements of the U.S. Environmental Protection Agency's (EPA) D/DBP Rule. Dissolved organic carbon (DOC) found in raw water sources is a known precursor to the formation of DBPs, which are created when free chlorine and DOC react to form halogenated organic compounds. The presence of bromide in raw water sources contributes to the formation of brominated DBP compounds. Currently, the D/DBP Rule regulates the MCL of two classes of DBPs; trihalomethanes (TTHM) and haloacetic acids (HAA5) at 80 and 60µg/L respectively. While there are no specific regulations pertaining to brominated DBPs specifically, their higher molecular weight can increase the difficulty of attaining compliance. The MIEX® Process is a magnetic anion exchange system that selectively removes DOC from water, and thus reduces the formation of DBPs. Because the MIEX® Process utilizes anion exchange, under some conditions bromide removal may be achieved, which may lead to a reduction in the formation of brominated DBPs.

The City of Sterling is also investigating treatment options to reduce the concentration of uranium in their raw water source in order to comply with the requirements of the EPA Radionuclides Rule. Under the rule, MCL for uranium in drinking water is set at 30 µg/L. According to the U.S. EPA, consumption of water with higher levels of uranium may have deleterious health effects. The MIEX® Resin is has a high selectivity for uranium, which may allow for compliance with regulatory requirements.

The objective of this study was to determine, through laboratory batch test procedures, the feasibility of reducing concentrations of DOC, bromide, and uranium found in the Scalva-1 raw water supply using MIEX® Resin treatment. Also evaluated was the ability to reduce the consumption of coagulant chemicals required after MIEX® Resin pretreatment. Parameters evaluated during the testing included UV_{254} absorbance (UVA), true color, DOC, bromide, uranium, and SDS DBP formation potential. DOC was selected rather than total organic

carbon (TOC) since it is the DOC that remains in potable water after filtration and is a better indicator of potential DBP formation. The combination of MIEX® treatment both preceding and following coagulation was also evaluated in order to quantify the effect of MIEX® Treatment on downstream processes and measure the potential reduction in chemicals.

A multiple loading test was conducted using MIEX® Resin on the raw water sample to determine the optimum regeneration rate for this source water. The optimum rate is the one that removes the greatest amount of the target anion while using the smallest amount of fresh resin.

2.0 Raw Water Characteristics

Orica Watercare received a raw water sample from the Scalva-1 well on February 24, 2009. The analytical methods used to characterize the sample and the corresponding results are shown in Table 1.

Table 1: Raw Water Characterization and Analytical Methods

Parameter	Units	Results	Analytical Method
DOC	mg/L	4.06	Method 5310C [1]
UVA (254 nm)	cm^{-1}	0.048	HACH DR4000U Method 10054 (Filtered with 0.45 micron filter)
SUVA	L/mg-m	1.18	UVA/DOC * 100
True Color	PCU	3	HACH DR4000U Method 8025 (Filtered with 0.45 micron filter)
Apparent Color	PCU	22	HACH DR4000U Method 8025 (Unfiltered)
pH	Units	7.25	pH Meter
Total Hardness	mg/L as $CaCO_3$	980	Standard Methods 2340C
Calcium Hardness	mg/L as $CaCO_3$	620	Standard Methods 2340C
T-Alkalinity	mg/L as $CaCO_3$	260	Standard Methods 2320B
Iron	mg/L	0.277	HACH DR4000U Method 8008
Sulfate	mg/L	1440	Standard Methods 4500-SO_4^{-2} E
Chloride	mg/L	130	HACH Titration Kit Method 8206
Conductivity	mS/cm	2.45	HACH HQ30d Conductivity Probe
Uranium	µg/L	36.2	Standard Methods 200.8
Bromide	µg/L	790	Standard Methods 300

3.0 Batch Testing Procedures

A Phipps & Bird, Six-Jar Paddle Stirrer with square 2-Liter jars was utilized for all batch testing.

3.1 MIEX® Resin Preparation

MIEX® Resin is shipped and stored wet and therefore the concentration is measured as a volume of settled resin contained in a one-liter sample (e.g., mL of settled resin per L of slurry). The resin was allowed to settle for 30 minutes before measuring the settled resin volume.

The MIEX® Resin used in testing was a sample of resin that had previously been loaded and then regenerated. Regenerated resin is referred to as fresh resin, whereas virgin resin is resin that has not been previously used. Fresh resin is representative of what would be used in an on-going full-scale process.

3.2 MIEX® Resin Batch Test

The multiple loading procedure best approximates full-scale, continuous plant operation. Results from this test indicate the regeneration rate required to achieve a target water quality. Treatment performance at a number of regeneration rates is determined by contacting a measured volume of resin with increasing volumes of raw water. The volume of raw water treated divided by the volume of resin used to treat the water determines the bed volumes (BV) of raw water treated. The highest BV treatment rate with the largest UVA reduction is selected as optimum treatment. The test method is outlined below:

Using a jar stirrer apparatus,

1. Add 5 mL fresh resin to an empty jar
2. Add 1 L of raw water sample to jar (200 BV treatment rate per cycle)
3. Mix for 15 minutes
4. Turn mixer off and allow resin to settle
5. Decant treated water into collection vessel while leaving resin in jar
6. Measure UVA, DOC, color, uranium, and bromide for the sample in collection vessel
7. Add another liter of raw water to resin and repeat Steps 3-6 until 1,000 BV have been treated

The multiple loading test is a precursor to the countercurrent test, which simulates what a two-stage counter current MIEX® System may accomplish. This configuration may improve the removal of target anions in high sulfate applications. A BV from the multiple loading test was selected based on optimal sulfate removal. The following procedure was then conducted on a raw water sample:

1. Conduct a multiple loading test to obtain the optimum MIEX® Treatment rate.
2. Discard the treated water and retain the used resin.
3. Conduct a multiple loading test with the used resin on raw water until the optimum MIEX® treatment is obtained.
4. Retain the treated water and discard the used resin.
5. Conduct a multiple loading test using fresh resin on the treated water.
6. Measure UVA, DOC, color, uranium, and bromide.

3.3 Conventional Coagulation Evaluation

A coagulation control test was conducted to simulate organic carbon removal using alum and ferric chloride in order to simulate potential treatment plant conditions.

Samples of water were added to a square jars and dosed with alum and ferric chloride. The jars were then mixed at 100 revolutions per minute (RPM) for one minute, 60 RPM for 10 minutes, 40 RPM for 10 minutes, 10 RPM for 10 minutes, and allowed to settle for 30 minutes.

After settling, unfiltered samples were collected and analyzed for turbidity, pH, alkalinity, sulfate, conductivity, iron, uranium, bromide, and apparent color. Additional samples were filtered through a 0.45-micron filter and analyzed for UVA, true color, and DOC.

3.4 Combined Treatment Evaluation

For the MIEX®/Coagulation tests, raw water was treated with MIEX® Resin at the optimal treatment rate determined from the MIEX® Resin jar tests (Section 3.2) followed by conventional coagulation with alum and ferric chloride. Samples were mixed following the same jar test procedure utilized in Section 3.3. After settling, unfiltered samples were collected from each jar and analyzed for turbidity, alkalinity, sulfate, uranium, bromide, conductivity, iron, pH, and apparent color. Additional samples were withdrawn from each of the jars and filtered through a 0.45-micron filter before being analyzed for UVA, true color,

and DOC. The combination of ferric chloride coagulation followed by MIEX® Resin treatment at the optimal treatment rate was also evaluated similarly.

4.0 MIEX® Treatment Results

The following section describes the results obtained for the removal of DOC, uranium, and bromide using MIEX® Resin treatment alone.

4.1 DOC Removal

The DOC versus BV treatment rate plots for the multiple loading MIEX® Resin batch tests (Section 3.2) are presented in Figure 1 and Table 2. Note on the graph and table below, the label "200cc" denotes a treatment rate of 200BV applied in a countercurrent configuration.

Figure 1: DOC Versus Bed Volume Treatment Rate

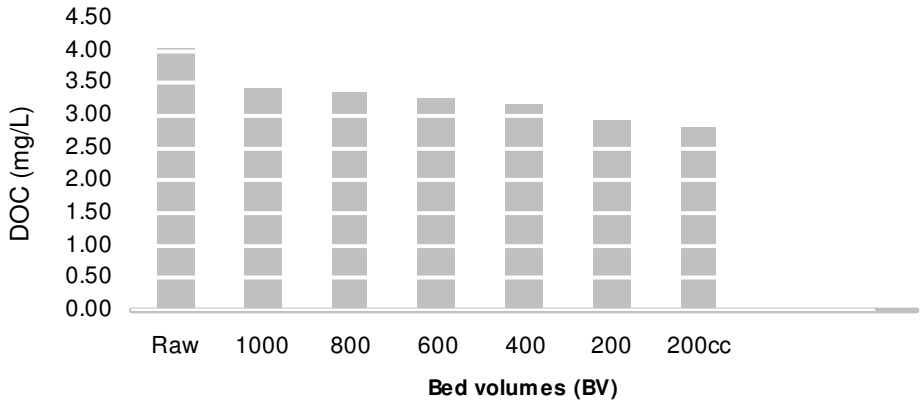

For the purposes of this evaluation, 200 BV was selected as optimal treatment rate. A treatment rate of 200 BV corresponds to regeneration of 5 gallons of resin for every 1000 gallons of plant throughput. A treatment rate of 200BV was selected as optimal for the Scalva-1 water source because the greatest amount of DOC removal was achieved using this treatment rate.

Table 2: MIEX® Resin Test Results

Tests Conducted at ~20 deg C							
Parameter	Raw	Treatment Rate (Bed Volumes)					
		1000	800	600	400	200	200cc
DOC (mg/L)	4.06	3.42	3.36	3.27	3.17	2.94	2.81
DOC % Removal	-	16%	17%	19%	22%	28%	31%
UVA (cm^{-1})	0.048	0.035	0.037	0.035	0.033	0.028	0.027
UVA % Removal	-	27%	23%	27%	31%	42%	44%
True Color (PCU)	3	0	0	0	0	0	0
pH	7.25	8.03	8.03	7.95	7.84	7.36	8.04

Application of MIEX® Resin using a 200 BV treatment rate reduced DOC by 28% to a treated water concentration of 2.94mg/L, UVA by 42% to a treated water value of 0.028/cm, and true color by 100%.

4.3 Uranium Removal

The uranium versus BV treatment rate results for the multiple loading MIEX® Resin batch tests (Section 3.2) are presented in Figure 2 and Table 3. All BV treatment rates resulted in uranium concentrations that were less than 75% of the MCL of 30 µg/L. Because results obtained using a conventional configuration of the MIEX® Process met the treated water requirements for uranium, the 200BV CC treatment configuration was not evaluated.

Figure 2: Uranium (µg/L) Versus Bed Volume Treatment Rate

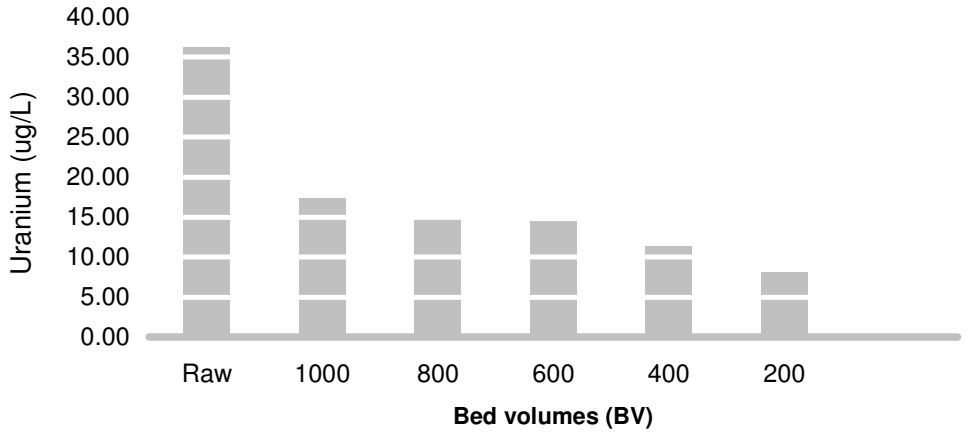

Table 3: MIEX® Resin Test Results for Uranium Removal

Bed Volumes	Uranium [µg/L]	% Reduction
Raw	36.2	-
1000	17.3	52%
800	14.9	59%
600	14.5	60%
400	11.3	69%
200	8.1	78%

The highest BV treatment rate tested that resulted in a uranium concentration less than the MCL was 1000BV. A treatment rate of 1000 BV corresponds to regeneration of 1 gallon of resin for every 1000 gallons of plant throughput. However, based on the results achieved for DOC removal, indicating a required treatment rate of 200BV, the treated water uranium concentration at 200BV treatment would meet regulatory requirements with a wide margin of safety at 8.1µg/L.

4.4 Bromide Removal

The Bromide versus BV treatment rate results for the multiple loading MIEX® Resin batch tests (Section 3.2) are presented in Figure 3 and Table 4.

Figure 3: Bromide (µg/L) Versus Bed Volume Treatment Rate

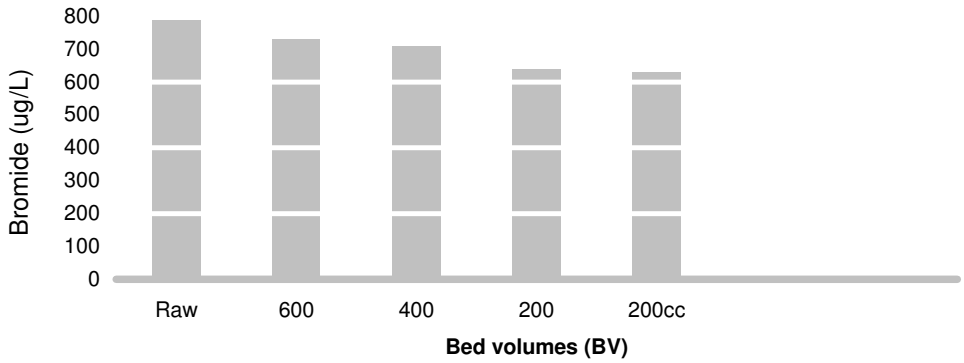

Table 4: MIEX® Resin Test Results for Bromide Removal

Bed Volumes	Bromide [µg/L]	% Reduction
Raw	790	-
600	730	7.6%
400	710	10%
200	640	19%
200cc	630	20%

Bromide removal achieved using a 200BV treatment rate on the Scalva-1 water was 19%. Using the 200BV CC configuration removed slightly more bromide, but not a sufficient amount to warrant use of this configuration of the process. Bromide removal is low, most likely due to interference from high levels of sulfate in the raw water source.

4.5 MIEX® Resin Treatment Summary

Based on the results of testing MIEX® Resin treatment alone for the Scalva-1 water source, the optimal treatment rate for this water is 200BV. Although sufficient uranium removal could be achieved using a lower regeneration rate (higher BV treatment rate), 200BV

treatment is necessary to achieve any significant removal of DOC or bromide from the raw water. The following sections discuss the use of MIEX® Resin treatment in conjunction with coagulation to evaluate the water quality that can be achieved using the combined treatment processes.

5.0 Coagulant Control Results

This section describes the results obtained for coagulation treatment of the Scalva-1 water.

5.1 DOC Removal

Raw water samples were dosed with alum and ferric chloride in order to determine the coagulant and dose necessary to achieve the greatest amount of DOC removal. Results from the Coagulant Control Test (Section 3.3) are presented in Tables 5-6.

Table 5: Coagulant Control Results - Alum

Parameter	Raw Water	Control Test	Control Test	Control Test	Control Test	Control Test	Control Test
Alum (mL)	0	0.5	1.0	1.5	3	5	7.5
Settled Turbidity (NTU)	2.50	3.11	3.27	3.77	4.65	3.15	2.62
UVA (cm^{-1})	0.048	0.054	0.055	0.053	0.057	0.052	0.056
DOC (mg/L)	4.06	4.09	4.04	4.02	4.03	3.95	3.93
pH	7.25	6.85	7.21	7.31	7.31	7.30	7.28
Iron (mg/L)	0.277	0.295	0.275	0.270	0.222	0.108	0.090
T-Alkalinity (mg/L)	260	280	240	260	240	240	220
Conductivity (mS/cm)	2.45	2.60	2.61	2.64	2.61	2.60	2.62
True color (PCU)	3	1	0	1	1	3	2
Apparent Color	22	26	24	31	37	33	26

Table 6: Coagulant Control Results - Ferric Chloride

Parameter	Raw Water	Control Test	Control Test	Control Test	Control Test	Control Test	Control Test
Ferric Chloride (mg/L)	0	25	50	75	100	150	200
Settled Turbidity (NTU)	2.50	0.53	0.84	1.04	2.18	1.08	0.87
UVA (cm^{-1})	0.048	0.053	0.050	0.046	0.042	0.025	0.025
DOC (mg/L)	4.06	4.08	3.88	3.75	3.42	3.04	2.66
pH	7.25	7.47	7.25	7.13	6.93	6.06	6.16
T-Alkalinity (mg/L)	260	240	220	200	160	140	80
Conductivity (mS/cm)	2.45	2.61	2.66	2.68	2.68	2.70	2.74
Sulfate (mg/L)	1440	1692.5	1595.0	1650	1657.50	1562.5	1605
True color (PCU)	3	3	2	2	1	3	5
Apparent Color	22	9	11	6	5	17	18

As indicated in the tables above, coagulation with alum did not result in significant removal of DOC or UV absorbance. It was also observed that alum coagulation did not result in quality floc formation. Coagulation with ferric chloride resulted in better floc formation and greater removal of DOC and UV absorbance that increased with increasing coagulant dose. These results demonstrate that a using dose of 150 mg/L of ferric chloride, the UVA and DOC were reduced by 48% and 25% to values of 0.025/cm and 3.04mg/L, respectively.

5.2 Uranium Removal

The uranium results for the raw control coagulated with 150 mg/L of ferric chloride are presented in Table 7.

Table 7: MIEX® Resin/Coag Test Results for Uranium Removal

	Raw	Control
Uranium (µg/L)	36.2	39.2

The results indicate that the raw water sample coagulated with 150mg/L of ferric chloride measured higher in uranium than the raw water, which may be due to laboratory error. It should be noted that the addition of ferric chloride reduced the pH and alkalinity of the water, which may changes the state of the uranium. In this water, the uranium most likely exists in a uranyl carbonate ion form $(UO_2(CO_3)_2)^{2-}$. As the addition of ferric chloride reduces the pH and alkalinity, the uranium converts to another form, which may react differently with regards to coagulation.

Since bromide is not expected to be removed from water using a coagulation process, the use of coagulation for bromide removal was not evaluated in this study.

6.0 Coagulation followed by MIEX® Results

The following sections of this document describe the results obtained using ferric chloride coagulation followed by MIEX Resin treatment.

6.1 DOC Removal

The results from the Coagulant/MIEX® Resin Combined Test (Section 3.4) are presented in Table 8. Coagulation was achieved using one (1) one-liter raw water coagulated with 150mg/L of ferric chloride followed by MIEX® Treatment at 200 Bed Volumes.

Table 8: Coagulation Followed by MIEX® Resin Pre-Treatment

Jar	Raw Water	Coagulation / MIEX®
MIEX® Treatment Rate (BV)	-	200
Ferric Chloride (mg/L)	0	150
UVA (cm^{-1})	0.048	0.025
% UVA Removal	-	48%
Turbidity (NTU)	2.50	31.2
Sulfate (mg/L)	1440	1482.5
True Color (PCU)	3	0
Apparent Color (PCU)	22	344
pH	7.25	6.53
DOC (mg/L)	4.06	2.52
% DOC Removal	-	38%

Table 8 indicates that dosing ferric chloride at a concentration of 150 mg/L followed by MIEX® Treatment at 200 BV, achieved a treated water DOC of 2.52 mg/L and a treated water UVA of 0.025/cm. This represents a 38% overall reduction in DOC and a 48% reduction in UVA.

6.2 Uranium Removal

The uranium results for coagulation (150mg/L ferric chloride) followed by 200BV MIEX® Resin treatment are presented in Table 9.

Table 9: Coagulation Followed by MIEX® Resin Treatment Uranium Removal

	Raw	Coagulation / MIEX®
Uranium (µg/L)	36.2	26
% Uranium Removal	-	28%

The results indicate that coagulation followed by MIEX® Resin Treatment reduced the uranium concentration by 28% with a finished uranium concentration of 26 µg/L. This is significantly higher than the values obtained with MIEX® Resin treatment alone at 200BV. This is most likely due to the fact that the addition of ferric chloride prior to MIEX® Resin treatment reduced the pH and alkalinity of the water, changing the state of the uranium to one that was less amenable to ion exchange treatment. In high pH water that is high in alkalinity, the uranium exists as a uranyl carbonate ion that can be removed using ion exchange. As the addition of ferric chloride reduces the pH and alkalinity, the uranium converts to a more stable form (an uncharged uranium carbonate or silicate solid, depending on the oxidation potential of the water), which is not as readily removed using ion exchange.

6.3 Bromide Removal

The bromide results for coagulation (150mg/L ferric chloride) followed by 200BV MIEX® Resin treatment are presented in Table 10.

Table 10: Coagulation Followed by MIEX® Resin Pre-Treatment Bromide Removal

	Raw	Coagulation / MIEX®
Bromide (µg/L)	790	680
% Bromide Removal	-	14%

The results indicate that coagulation followed by MIEX® Resin treatment reduced bromide concentrations by 14% with a finished bromide concentration of 680 µg/L. These values are comparable to those obtained using MIEX® Resin treatment alone. It is unlikely that coagulation is removing any additional bromide from the raw water source.

7.0 MIEX® Followed By Coagulation Results

This section details the results obtained using MIEX Resin treatment applied at a rate of 200BV followed by ferric chloride coagulation.

7.1 DOC Removal

The results from the MIEX® Resin /Coagulant Combined Tests (Section 3.4) are presented in Table 11. Samples were coagulated with ferric chloride using four (4) one-liter raw water samples that were previously treated with MIEX® Resin at a treatment rate of 200BV.

Table 11: MIEX® Resin Followed by Coagulation Results

Jar	Raw Water	MIEX® / Coagulation	MIEX® / Coagulation	MIEX® / Coagulation	MIEX® / Coagulation
MIEX® Treatment Rate (BV)	-	200			
Ferric Chloride (mg/L)	0	50	75	100	150
UVA (cm^{-1})	0.048	0.031	0.030	0.026	0.026
Turbidity (NTU)	2.50	1.50	0.70	0.81	0.73
Sulfate (mg/L)	1440	1610	1527.5	1510	1547.5
True Color (PCU)	3	0	2	0	0
Apparent Color (PCU)	22	12	14	23	21
pH	7.25	6.76	6.87	6.79	6.60
DOC mg/L	4.06	2.91	2.73	2.57	2.33
% DOC Removal	-	28%	33%	37%	43%

Table 11 indicates that dosing ferric chloride at a concentration of 100 mg/L achieved a treated water DOC of 2.57 mg/L and a treated water UVA of 0.026/cm. This represents a 37% overall reduction in DOC and a 46% reduction in UVA. This is similar to what was achieved by using coagulation treatment (150mg/L ferric chloride) followed by MIEX® Resin treatment, indicating the potential to reduce the coagulant dose downstream of MIEX® Pretreatment.

7.2 Uranium Removal

The uranium results for the MIEX® followed by coagulation with 100 mg/L of ferric chloride are presented in Table 12.

Table 12: MIEX® Resin Followed by Coagulation Results for Uranium Removal

	Raw	Coagulation / MIEX®
Uranium (µg/L)	36.2	5.3
% Uranium Removal	-	85%

The results indicate that MIEX® Resin pretreatment, at a 200BV treatment rate, followed by coagulation reduced uranium concentrations by 85%, resulting in a finished water uranium concentration of 5.3 µg/L. This is 35% lower than the 8.1µg/L treated water uranium concentration achieved by 200BV MIEX® Resin treatment alone.

Bromide removal was not evaluated for this treatment scheme, due to the unlikelihood of coagulation removing any additional bromide after MIEX® Resin treatment.

8.0 Disinfection By-Product Reductions

A Simulated Distribution System (SDS) TTHM test was run on the Scalva-1 raw water source, raw water treated with 200 BV MIEX® Resin treatment alone, and the raw water coagulated with 150mg/L ferric chloride followed by 200BV MIEX® Resin treatment to evaluate the effect of different treatment conditions on DBP formation. The test conditions for the SDS DBP formation potential of the treated water samples are summarized in Table

13. SDS conditions were selected by Richard P. Arber Associates in order to simulate actual conditions in the City of Sterling distribution system. Samples were sent to MWH Labs for analysis on March 4, 2009.

Table 13: SDS TTHM Incubation Conditions

Parameter	SDS Method
Incubation Temperature	20°C
Incubation Period	2 days 5 days (raw water only)
pH	8.1
Chlorine Residual after 5 days	0.5mg/L

The results of the SDS TTHM potential tests are shown in Table 14 below.

Table 14: SDS TTHM Formation Potential Test Results

Species	Raw 2-day (µg/L)	Raw 5-day (µg/L)	200BV MIEX® 2 day (µg/L)	150 mg/L FeCl3/ 200BV MIEX® 2 day (µg/L)
Chloroform	9.1	27.0	8.9	5.0
Bromodichloromethane	7.5	38.0	6.2	5.2
Dibromochloromethane	19	71.0	17.0	14.0
Bromoform	65.0	50.0	53.0	43.0
Total Trihalomethanes as $CHCl_3$	**101.0**	**186.0**	**85.0**	**72.0**

SDS TTHM formation is dominated by the brominated species, most likely due to the high levels of bromide present in the raw water. MIEX® Resin treatment alone reduced the 2-day SDS TTHM formation potential by 16% versus the raw water sample, while the combination of coagulation and MIEX® Resin treatment reduced SDS TTHM formation by 29% versus the raw water sample. As indicated in the table above, the SDS TTHM formation potential for the Coagulation/MIEX® sample, at 72.0µg/L, was slightly below the EPA MCL of 80µg/L. It is possible that DOC removal could be improved such that DBP formation is further reduced, possibly with the addition of an oxidant, such as chlorine dioxide, prior to MIEX® Resin treatment.

8.0 Conclusions

MIEX® Resin Treatment:

- The optimum MIEX® Treatment rate was determined to be 200 BV for the Sterling raw water. This was determined based on DOC removal results. Results are as follows:
    - DOC was reduced by 28% to a concentration of 2.94mg/L
    - Uranium was reduced by 78% to a concentration of 8.1µg/L
    - Bromide was reduced by 19% to a concentration of 640µg/L
    - MIEX® Resin treatment alone reduced 2-day SDS TTHM formation by 16%

Sulfate is a major competing ion with the MIEX® Resin process, and sulfate concentrations were extremely high (1440mg/L) in the Scalva-1 water source. The presence of sulfate likely interfered with the removal of DOC and bromide. Given the resin's high selectivity for uranium, removal was still achieved even with high sulfate in the water source.

MIEX® Resin pretreatment at a rate of 200BV followed by coagulation using 100 mg/L of ferric chloride resulted in the following:

- DOC was reduced by 37% overall to a concentration of 2.57mg/L
- Uranium was reduced by 85% to a concentration of 5.3µg/L

Coagulation using 150mg/L ferric chloride followed by 200BV MIEX® Resin treatment resulted in the following:

- DOC was reduced by 38% overall to a concentration of 2.52mg/L
- Uranium was reduced by 28% to a concentration of 26µg/L
- Bromide was reduced by 14% to a concentration of 680µg/L
- SDS TTHM formation was reduced by 29%, to a concentration of 72µg/L as $CHCl_3$

It is recommended that MIEX® Resin treatment be applied prior to coagulation in order to improve uranium removal and to realize any potential reductions in chemical dosages that may be possible downstream of MIEX® Treatment. The potential reduction in coagulant dose may indicate reduced costs for coagulant chemicals, pH adjustment chemicals, and solids handling required downstream of a MIEX® Treatment system.

It is possible that the performance of the MIEX® Treatment system may be improved by increasing the regeneration rate (using a lower BV treatment rate, such as 100BV) or possibly by the addition of an oxidant prior to MIEX® Resin treatment. Oxidized DOC may be more amenable to removal using an ion exchange process.

9.0 Recommendations

It is recommended that further bench testing or a pilot plant trial be conducted at this facility. During the course of further testing, the ideal resin dose (bed volume) could be confirmed along with operating cost associated with this dose. Additionally, the raw water coagulation conditions could be better identified, and work with a chemical oxidant could be performend. In addition, an equipment budget at ±10% can be better estimated after actual plant operating conditions are determined from further testing. A pilot plant proposal can be provided upon request.

Appendix I

Cut Sheets and Data Sheets

PALL Water Processing

May 28, 2009

STERLING, CO
Microfiltration System Budgetary Quote

Design Conditions:

- 2.9 MGD at 65 GFD
- Source: Groundwater
- Process: Blending with NF

Pall's Equipment Scope of Supply (Phase 1)

- (2+0) 8" Valve Rack, HDPE, HDPE tubing
- (2+0) Module Racks, HDPE, Quad, 56 spaces, 49 mods installed/rack,
- (1+1) Feed Pumps, Goulds, 75 HP, with VFD
- (2+1) Feed Strainers, Amiad, 8"
- (1+1) RF Pumps, Goulds, 15 HP, with VFD
- (1+1) Air Compressors, Atlas Copco, GA11C-150FF, 15 HP
- 1 Air Receiver, 400 Gal
- 2 CIP/EFM Tanks, 2500 Gal HDPE 90D, 2500 Gal HDPE 90D,
- (1+1) CIP Circulation Pumps, Grundfos 7.5 HP, 310 GPM @ 70 ft, 3500 RPM, Non-skid Option
- (1+1) CIP Drain Pumps, Grundfos 7.5 HP, 310 GPM @ 70 ft, 3500 RPM, Non-skid Option
- Ex-works Factory (Cortland, NY)

Budgetary Sales Price: $ 1,400,000

Pall's Equipment Scope of Supply (Phase 2)

- Fill blank module spaces with 14 Total Modules (7 per rack) to achieve additional 400,000 gpd filtrate production

Budgetary Sales Price (Including Phase 1 Scope): $1,450,000

Engineering hours included in this quote are based on supplying Pall's standard equipment and submittals.

All sales made by Pall are subject to general conditions of sales set forth in the attached Terms & Conditions. This quote is for discussion purposes only, does not constitute a binding agreement on either party, and remains subject to corporate approval by both parties. The information contained herein is deemed confidential and is not to be shared with any third party.

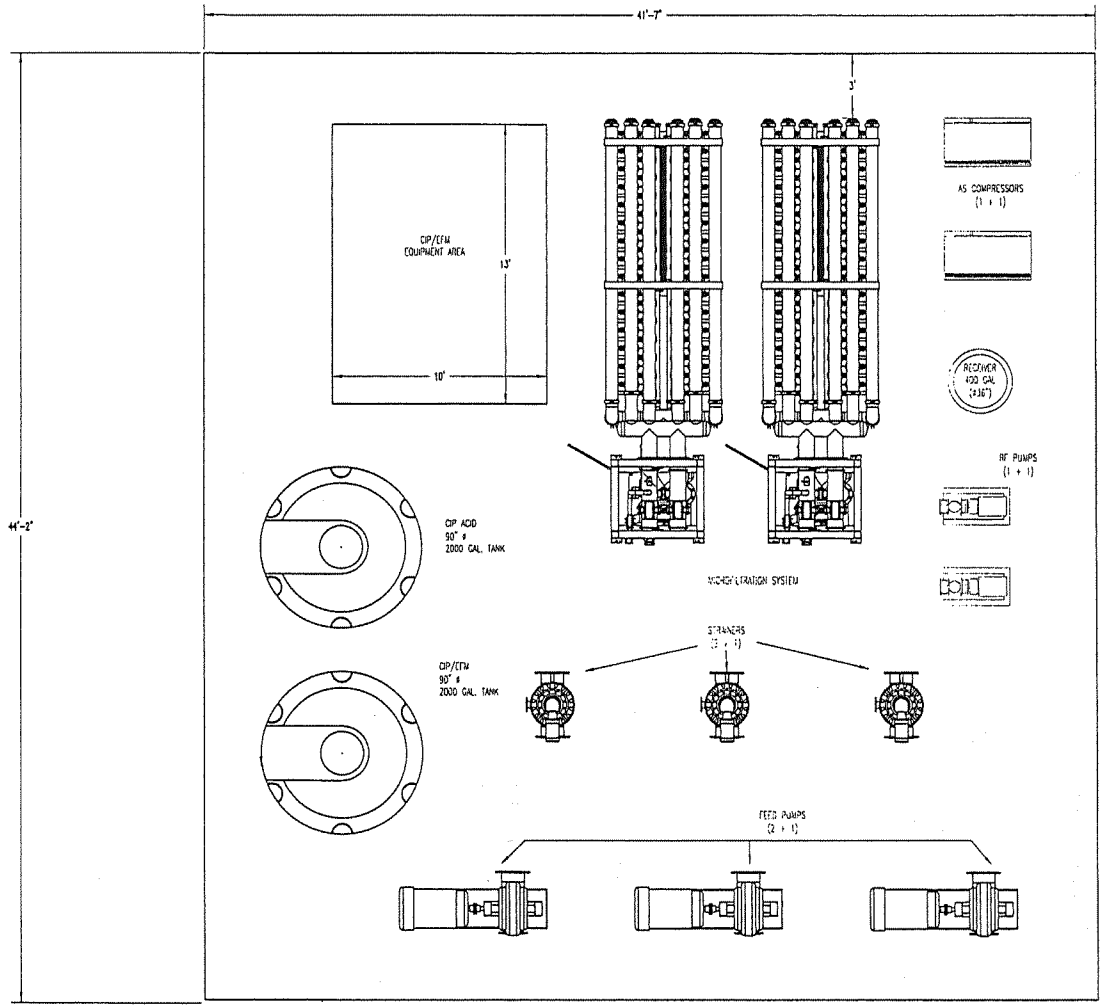

CODE IDENT. NO. 17228	NAME	DATE
DRAWN BY	A. FLOREY	11/02/93
PROJECT ENGINEER		
ENGINEER		
MANUFACTURING		
ENGINEERING MANAGER		
QUALITY CONTROL		
RELEASED BY		

COMPANY CONFIDENTIAL

--> DO NOT SCALE DRAWING <--

UNLESS OTHERWISE SPECIFIED, DIMENSIONS APPEARING ON THIS DRAWING ARE IN INCHES UNLESS OTHERWISE NOTED

INCH ONLY

TOLERANCES
X ± .XX
X ± .XXX
XX ± .XXX
X ± .XXXX
SURFACE FINISH
ANGLE ±

DRAWING TITLE

4 MGD
PRELIMINARY MF SYSTEM LAYOUT

PALL Pall Corporation
PALL TRINITY MICRO
CORTLAND, NEW YORK

PART NUMBER

REV. NO. D

DRAWING NUMBER NONE

SCALE 1:32

SIZE *

NEXT ASSY
PROJECTION

CHECKED BY

DATE

CHECKED BY NONE

SHEET 1 OF 1

WARRANTY SUBMITTAL

Pall Microfiltration System and Module Warranty

SUBMITTED TO:

SAMPLE

SUBMITTED BY:

PALL CORPORATION
25 Harbor Park Drive
Port Washington, NY 11050

BEGINNING DATE OF WARRANTY: TBD

PALL will offer the following warranties with the purchase of the proposed microfiltration system.

The Pall Standard Terms and Conditions are attached.

Terms of Material, Workmanship, Repair & Replacement Warranty

i. THERE IS NO WARRANTY OF MERCHANTABILITY OR FITNESS FOR ANY PARTICULAR PURPOSE WITH RESPECT TO ANY OF THE PRODUCTS, NOR IS THERE ANY OTHER WARRANTY EXPRESS OR IMPLIED, EXCEPT AS PROVIDED FOR HEREIN.

ii. **Hardware Warranty:** For 12 months commencing from the date of start-up or eighteen months from time of delivery from Seller (the "Warranty Period"), Seller warrants that products manufactured by Seller when properly installed and maintained, and operated at ratings, specifications and design conditions, will be free from defects in material and workmanship.

iii. **Module Warranty: (10 YEAR - 1 YEAR ABSOLUTE AND 9 YEARS PRO-RATED)**
For a period of one hundred and twenty months commencing from the date of the startup, or one hundred and twenty six months from the time of delivery from Seller (the "Warranty Period"), whichever is sooner, Seller warrants that the membrane modules, when properly installed and maintained, and operated at ratings, specifications and design conditions, will be free from defects in material and workmanship. In addition, Seller

warrants satisfactory performance of each membrane module based on the microfilter system's ability to support design flow rates and the membrane modules passing the Seller's standard integrity test.

Owner and Seller will work together to optimize the specific operating protocol to be used including number of racks on line, flow rates per rack, cleaning technique and cleaning set points with the goal of achieving excellent long-term performance. Any change in operating conditions, water chemistry or the nature of the contaminants will require a review to determine the potential for impact on this warranty.

If the membrane modules fail to perform as outlined for up to *twelve months* commencing from the startup, or *eighteen months* from the time of delivery from Seller, whichever is sooner, Seller will be given the opportunity to remedy the situation, for example, by modifying operating and/or cleaning protocol. If Seller is not able to remedy the situation, Seller will repair or replace those modules that do not perform if they are removed from service due to poor performance.

If the membrane modules fail to perform as outlined after *twelve months* up to *one hundred twenty months* commencing from startup, or after *eighteen months* to *one hundred twenty six months* from the time of delivery from Seller, whichever is sooner, Seller will be given the opportunity to remedy the situation, for example, by modifying operating and/or cleaning protocol. If Seller is not able to remedy the situation or repair the modules, Seller will replace those modules at the following replacement price:

- Replacement Module Price = Module Price x (# of months from startup/120 months)

  Or
- Replacement Module Price = Module Price x ((# of months from delivery – 6)/ 120 months))

PALL is committed to continuous development of its filters and filter processes. Should membrane technology improve, for example via changes in the permeability or operating flux rates of the membranes, Pall reserves the right to provide a suitable number of alternative membrane replacements during the term of our warranty and beyond. This does not change the warranty since PALL guarantees the design flow capacity and the operational performance as defined within this proposal.

iv. Seller's liability under any warranty is limited solely (in Seller's discretion) to replacing (FOB original ship point), repairing or issuing credit for products which become defective during the Warranty Period. Purchaser shall notify Seller promptly in writing of any claims

and provide Seller with an opportunity to inspect and test the product claimed to be defective.

v. In no event shall Seller be liable for any product altered outside of the Seller's factory by someone other than Seller or for a product subjected to misuse, abuse, improper installation, application, operation, maintenance or repair, alteration, accident, or negligence in use, storage, transportation or handling.

vi. Seller shall not be liable for any damage or defect to equipment caused by improper use or mishandling of consumable items used in the operation of the treatment plant or by normal wear & tear or impact.

vii. Seller shall not be liable for any damage or defect to equipment caused by operation of the equipment not in accordance with seller provided Operation and Maintenance manual even if seller is not aware of the existence of these conditions. Neither shall seller be liable for repairs, alterations or replacements to or uses of the equipment, which go beyond the equipment specification.

viii. Seller shall not be liable for any damage or defect to equipment caused by operation of the equipment at pressures during forward flow, air scour and reverse flow modes higher than those recommended in the Operation and Maintenance manual

ix. Limitation of Liabilities: Notwithstanding anything elsewhere herein contained, PALL shall not be liable for any loss or damage in excess of the purchase price of the equipment.

x. The performance bond issued in conjunction with this contract will only cover a one-year warranty period and will not cover the long term warranties outlined above.

xi. Warranty does not cover fiber damage due to foreign debris.

xii. Warranty is void if customer is in default of payment to Pall Corporation.

xiii. For long term membrane warranties customer is required to contract Pall Corporation to perform one system audit and CIP annually to maintain warranty validity. In addition, CIPs must be conducted by the customer at the interval and formulation indicated in the Operations and Maintenance Manual (O&M Manual) and the system must be operated per the conditions indicated in the O&M manual or as may be modified as per section iii of this warrantee.

Pall Corporation

Western Hemisphere
Standard Terms and Conditions of Sale - Systems

1. **Acceptance:** The Seller agrees to sell and the Buyer agrees to buy the totality of Seller's deliverable items and associated infrastructure and applications and all specified interfaces, if any (collectively, "System") and such purchase and sale and Seller's acceptance of Buyer's purchase order for Systems and any part thereof is subject to and limited to Seller's express terms and conditions of sale contained herein (including the Schedule of Commercial Terms, if one is attached hereto (the "Schedule")) and in any quotation, proposal, order acknowledgment form or similar document delivered by Seller to Buyer (the "Seller Acknowledgement Form") and any terms incorporated herein or therein by reference (collectively, "Seller's Terms and Conditions of Sale"). Any additional or different terms or any attempt by Buyer to vary in any degree any of Seller's Terms and Conditions of Sale are hereby objected to and shall be deemed material and not binding on Seller.

2. **Buyer and Seller Responsibilities**: The Buyer shall be responsible for correctly specifying and advising the Seller of its requirements for the System, including, where applicable, design specifications, and is responsible for any discrepancies, errors or omissions in drawings, documentation or other information supplied in writing by it, if any, or between such documents and any of the other documents forming part of this order. The Buyer agrees that the design specifications and requirements described in the Scope of Works in Item 4 of the Schedule (if one is attached) or otherwise in Buyer's documents delivered to Seller correctly represent the Buyer's requirements for the System as advised to the Seller, and acknowledges that the Seller's supply of the System will be based on such design specification and requirements.

   It is the Buyer's sole responsibility to ensure that its premises are safe and suitable for the installation and operation of the System or performance of any associated services. When requested and appropriate, and at the Buyer's cost, the Seller shall, prior to delivery of any part of the System inspect the relevant premises to confirm that the premises are suitable for the installation and operation of any part of the System and, if Seller performs such inspection and determines that any aspect of any inspected premises is not suitable for the installation and operation of that part of the System, the Seller shall provide the Buyer with such information in writing and such assistance as may be necessary to enable the Buyer at its own cost to prepare the premises so that they are suitable for the installation and operation of the System.

   The Buyer shall allow the authorized personnel of the Seller access to its premises during normal working hours for the purpose of performing its obligations under this order.

   The Seller shall take reasonable care to ensure that, in the delivery and, if applicable, installation of the System, that the Seller does not interfere with the operations of the Buyer or its employees or any other contractor working on the premises.

   If Seller is performing installation, oversight or commissioning services and, in the reasonable opinion of the Seller, it is necessary to remove or disconnect any existing equipment of the Buyer in order to install or commission the System, the Seller shall give the Buyer reasonable prior notice of such requirements and the Buyer shall provide the Seller, at Buyer's cost, with such assistance as is reasonably necessary to facilitate such removal or disconnection.

   Standard terms of sale include two sets of operating instructions in Seller's standard electronic format. If additional sets or alternative formats are required, they are available at an additional charge. Upon receipt of request for additional sets, a price quotation will be forwarded.

© Pall Corporation 2008

3. **Delivery & Title:** Seller reserves the right to make partial deliveries and to ship Systems (or parts thereof) as they become available, in advance of the quoted delivery date. If the System is to be delivered in installments, then insofar as parts of the System are subject to the same purchase order, the order will be treated as a single contract and not severable. The delivery and/or shipping schedule is the best estimate possible based on conditions existing at the time of Seller's acceptance of the order or Seller's quotation and receipt of all specifications, as applicable, and in the case of non-standard items, any such date is subject to Seller's receipt of complete information necessary for design and manufacture. Seller assumes no liability whatsoever, including loss of use or for any other direct, indirect, or consequential damages due to delays.

   Unless otherwise mutually agreed to in writing signed by both Seller and Buyer:

   i. Delivery from Seller's factory, or sub-contracted fabricator, or designated shipment point (collectively, "Seller's Shipment Point") to Buyer's specified destination shall be FCA (Free Carrier) Incoterms 2000 Seller's Shipment Point. Title and risk of loss pass at the point when the System or parts thereof are loaded on the conveyance (i.e., Common Carrier, Licensed Trucker or Rail Car) at the Seller Shipment Point (provided that Seller shall retain a security interest over such Systems or part thereof (and shall be entitled to require Buyer to deliver the Systems and/or part thereof to Seller or its designee and, if Buyer fails to do so, to enter the premises of Buyer or any third party where the Systems and/or part thereof are stored and repossess the Systems and/or part thereof) until payment in respect of the Systems or part thereof, as the case may be, is received by Seller, its sub-contracted fabricator or designated shipment point) and Buyer has the obligation to insure once title passes.

   ii. Unless otherwise directed by Buyer, Seller will, at Buyer's risk and expense, arrange for the delivery of the System or parts thereof to Buyer's site/facility. Buyer will pay, or reimburse Seller for all freight charges, taxes, duties, entry fees, brokers fees, special, miscellaneous and all other ancillary charges and special packaging charges.

4. **Prices:** The price for the System and/or parts and/or installation, oversight or commissioning services thereof shall be Seller's quoted price. Except as may be specifically provided in Seller's quotation or proposal or the Schedule (if one is attached), all prices are subject to change without notice. Pall may also at any time assess a fuel or energy surcharge (in addition to the price of each Product).

5. **Taxes:** All prices are exclusive of any applicable federal, state or local sales, use, excise or other similar taxes, including, without limitation, value added tax, goods and services tax or other similar tax. All such taxes will be for Buyer's account and will be paid by Buyer to Seller upon submission of Seller's invoices. Buyer agrees to make tax accruals and payments to the tax authorities as appropriate. If Buyer is exempt from any applicable sales tax or equivalent but fails to notify Seller of such exemption or fails to furnish its Sales Tax Exemption Number to Seller in a timely manner and the Seller is required to pay such tax, the amount of any such payment made by Seller will be reimbursed by Buyer to Seller upon submission of Seller's invoices.

6. **Payment:**

   i. Payment shall be made by Buyer in U.S. Dollars net thirty (30) days after invoice date, unless Purchase Order provides for installment payments. Installment payments will be made per the following schedule

a. 20% upon earlier of (i) Seller being awarded project or (ii) delivery to Seller of the purchase order or (iii) Seller acknowledgment of the purchase order
b. 30% of contract value upon first submittal of drawings by Seller for approval.
c. 40% of contract value upon earlier of (i) date of shipment by Seller of the System (or components thereof if the order is for parts only) or (ii) date of Seller's notice that the System (or components thereof if the order is for parts only) is ready for shipment by Seller.
d. 10% of contract value upon the earlier of (i) first usable effluent being produced by the System, or (ii) 30 days from shipment of the System.

ii. A monthly interest charge at the rate of one and one half percent or the maximum legal rate allowed by applicable law, whichever is lower, will be assessed on all past due payments calculated from the date of shipment.

iii. Seller may, at any time or times, suspend performance of any order or require payment in cash, security or other adequate assurance satisfactory to Seller when, in Seller's opinion, the financial condition of Buyer or other grounds for insecurity warrant such action.

iv. All sales are subject to the approval of Seller's credit department.

v. Buyer may not setoff or try to setoff any amounts that may be claimed by Buyer against any amounts that are owed to Seller.

7. **Warranty, Limitation of Liability and Remedies:**

i. THERE IS NO WARRANTY OF MERCHANTABILITY OR FITNESS FOR ANY PARTICULAR PURPOSE WITH RESPECT TO ANY OF THE SYSTEMS (OR PARTS THEREOF), NOR IS THERE ANY OTHER WARRANTY EXPRESS OR IMPLIED, EXCEPT AS PROVIDED FOR HEREIN.

ii. For a period of twelve months from the date of delivery by Seller (the "Warranty Period"), Seller warrants that Systems manufactured by Seller when properly installed and maintained, and operated at ratings, specifications and design condition, will comply with Seller's specifications for such System set forth in the Schedule (if one is attached), or provided by Seller to Buyer, or, in the absence of such specifications, such specifications as have been provided by Buyer to Seller and accepted in writing by Seller and included in the Seller Acknowledgment Form, at the time of the order.

iii. Seller's liability under any warranty is limited solely (in Seller's discretion) to replacing, repairing or issuing credit for Systems (or parts thereof), which fail to meet the above warranty during the Warranty Period, up to the price received by Seller for such Systems (or parts thereof). Buyer shall notify Seller promptly in writing of any claims and provide Seller with an opportunity to inspect and test the System (or part thereof) claimed not to meet the above warranty. Buyer shall provide Seller with a copy of the original invoice for the System, and prepay all freight charges to return any System (or party thereof) to Seller's factory, or other facility designed by Seller. All claims must be accompanied by full particulars, including System operating conditions, if applicable.

iv. If Seller shall perform any installation, oversight or commissioning services, such services shall be performed in a workmanlike manner, in accordance with applicable law and industry standards by qualified personnel; this warranty shall survive for thirty (30) days from the date the installation is completed. In the event of a warranty claim under this paragraph, Buyer shall inform Seller in writing of the details of the claim within thirty (30)

days of the completion of installation, oversight or commissioning services by Seller and Buyer's sole option and relief shall be for Seller, at Seller's discretion, to repeat the service at its own expense or refund the installation fee paid by Buyer, if any. If Seller determines that any warranty claim is not, in fact, covered by the foregoing service warranty contained in this paragraph, Buyer shall pay Seller its then customary charges for all services performed by Seller.

v. In no event shall Seller be liable for any System (or parts thereof) altered or installed by someone other than Seller or for a System (or parts thereof) subjected to misuse, abuse, improper installation (other than by Seller), application, operation, maintenance or repair, alteration, accident, or negligence in use, storage, transportation or handling.

vi. In no event will Seller be liable for any damages, incidental, special, consequential, indirect, punitive or otherwise, including loss of profit, remanufacturing cost, rework cost, de-installation or re-installation cost, whatever the claim (tort, breach of contract or warranty or otherwise) and whatever the forum, whether arising out of or in connection with the manufacture, packaging, delivery, storage, use, installation, misuse or non-use of any of its Systems or parts thereof or their use or resale by Buyer or any other cause whatsoever. Without limiting the generality of the foregoing, in no event will Seller be liable for any costs, damages or expenses in excess of the price paid to Seller with respect to the System (or parts thereof) sold to Buyer under this Order.

vii. In no event shall Buyer be entitled to claim under this or other warranty if Buyer is in breach of its obligations, including payment, hereunder.

8. **Cancellation:** Buyer may not cancel its order after Seller's acceptance unless all the details are approved in writing by the parties, including Buyer's agreement to pay a stated amount of termination charges.

9. **System Returns:** Systems or parts thereof may not be returned for any reason without prior written authorization and shipping instructions from Seller. Systems (or parts thereof) shipped without Seller's authorization shall be returned at Buyer's expense. Credit for any returned Systems or parts thereof is at the discretion of Seller after receipt and inspection of the Systems or parts thereof.

10. **Claims:** Unless and then only to the extent that an acceptance test regime is provided for in the Scope of Works included in the Schedule (if one is attached), all claims for incorrect Systems or parts thereof must be made in writing within ten days after receipt of applicable part.

11. **Variations:** Seller shall not implement any variations in the scope of work described in Seller's documentation unless Buyer and Seller agree in writing to the details of the variation and any resulting price, schedule or other contractual modifications. This includes any variations necessitated by a change in applicable law occurring after the effective date of any purchase order including these Terms and Conditions of Sale.

12. **Patent or Trademark Infringement:** Buyer shall indemnify and defend, at its own expense, Seller against claims or liability for U.S. or applicable foreign patent or trademark or other intellectual property infringement and for product liability arising from the preparation or manufacture of a System or part thereof according to Buyer's specifications or instructions, or from Buyer's unauthorized use of Seller's System or part thereof or from any changes or alterations to Seller's System or part thereof made by persons other than Seller.

13. **Ownership of Materials:** All devices, designs (including drawings, plans and specifications), estimates, prices, notes, electronic data and other documents or information prepared or

disclosed by Seller, and all related intellectual property rights, shall at all times remain Seller's property. Seller grants Buyer a non-exclusive, non-transferable license to use any such material to the extent necessary and solely for Buyer's use of the System purchased by Buyer from Seller hereunder. Buyer shall not disclose any such material to third parties without Seller's prior written consent. As a condition to Seller's delivery to Buyer of the System and/or parts thereof, Buyer shall not, directly or indirectly, and shall cause its employees, agents and representatives not to: (i) alter or modify the System and/or parts thereof, (ii) disassemble, decompile or otherwise reverse engineer or analyze the System and/or parts thereof, (iii) remove any product identification or proprietary rights notices, (iv) modify or create derivative works, (v) otherwise take any action contrary to Seller's rights in the technology and intellectual property relating to the System and/or parts thereof, (vi) assist or ask others to do any of the foregoing.

14. **Export:** As a condition to Seller's delivery to Buyer of the System and/or parts thereof, Buyer agrees, with respect to the exportation or resale of the System, and/or parts thereof by Buyer, to comply with all requirements of the International Traffic in Arms Regulations ("ITAR") and the Export Administration Regulations ("EAR"), regulations issued thereunder and any subsequent amendments thereto, and all other National, including, but not limited to, European, government laws and regulations on export controls, including laws and regulations pertaining to export licenses, restrictions on export to embargoed countries and restrictions on sales to certain persons and/or entities.

15. **Entire Agreement:** Seller's Terms and Conditions of Sale and the Confidentiality Agreement, if any, are the entire agreement of the parties and they may not be modified except in writing signed by a duly authorized representative or officer of Seller.

16. **Quotation:** All quotations by Seller are subject to change or withdrawal without prior notice to Buyer, unless otherwise specifically stated in Seller's quotation or proposal. Quotations are made subject to approval by Seller of Buyer's credit. All sales, contracts and orders become effective only if and when approved and accepted in writing by Seller by the issuance of its Seller Acknowledgment Form.

17. **Confidentiality:** If Seller discloses or grants Buyer access to any research, development, technical, economic, or other business information of "know-how" of a confidential nature, whether reduced to writing or not, Buyer will not use or disclose any such information to any other person or company at any time, without Seller's prior written consent. In the event that Buyer and Seller have entered into a separate confidentiality agreement (the "Confidentiality Agreement"), the terms and conditions of such agreement shall take precedence over the terms of this paragraph.

18. **No Waiver:** Seller's failure to insist on Buyer's strict performance of the terms and conditions contained herein at any time shall not be construed as a waiver by Seller of performance in the future.

19. **Force Majeure:** Whenever performance by Seller of any of its obligations hereunder, is substantially prevented by reason of any act of God, strike, lock-out, or other industrial or transportation disturbance, fire lack of materials, law, regulation or ordinance, war or war conditions, or by reason of any other matter beyond its reasonable control, then such performance shall be excused, and deemed suspended during the continuation of such event and for a reasonable time thereafter, delayed, or adjusted accordingly.

20. **Validity:** If any provision of these Seller's Terms and Conditions of Sale is held by any competent authority to be invalid or unenforceable in whole or in any part, such provision shall be ineffective, but only to the extent of such invalidity or unenforceability, without invalidating the remainder of such provision nor the other provisions, which shall not be affected.

© Pall Corporation 2008

21. **Governing Law:** These Seller's Terms and Conditions and the parties' agreement for sale of Systems and/or parts thereof and/or services relating thereto shall be governed by the laws of the State of New York, without regard to conflict of laws principles therein and the parties agree to submit to (and waive any objection on the grounds of inconvenient forum or otherwise) the jurisdiction of the Supreme Court of the State of New York, County of Nassau or the United States District Court for the Southern District of New York, which courts shall have exclusive jurisdiction to adjudicate and determine any suit, action or proceeding regarding or relating to these Terms and Conditions and the purchase and supply of the Systems and/or parts thereof or services relating thereto. A judgment, order or decision of those courts in respect of any such claim or dispute may be recognized and enforced by any courts of any state, country or other jurisdiction.

22. **Survival:** All payment, confidentiality and indemnity obligations, warranties, limitations of liability, product return, and ownership of materials provisions together with those Sections the survival of which is necessary for the interpretation or enforcement of these terms and conditions, shall continue in full force and effect for the duration stated in such provisions or the applicable statute of limitations.

PALL WH 1007

© Pall Corporation 2008

Fil-Trek

GLH SERIES

cartridge filter housings
asme design
universal

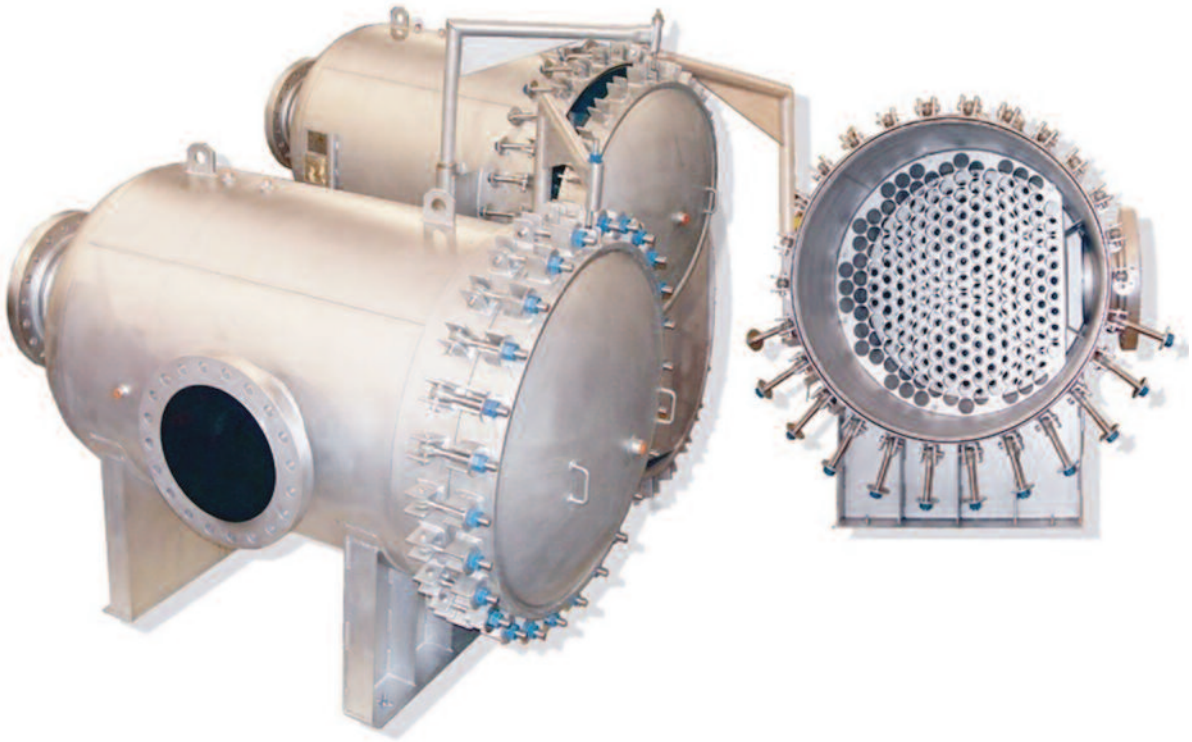

- Water
- Desalination
- Chemicals
- Electronics
- Food & Beverage
- Oil/Gas
- Air/Gas
- Inks/Paints/ Coatings
- Power
- Coolants
- Pult & Paper

GLH Series ASME/NB/CE/CRN

- Multi-purpose horizontal ASME "U" code housings.
- Accepts multiple 30", 40" & 50" cartridges.
- 150psig (10.3bar) @ 250°F(121.1°C) operating pressure.
- Vessels available in carbon or stainless steel 304 or 316.
- Also available in LDX2101, C276, AL6XN, RA2205 & Monel 400.
- Housings accept industry standard double open end style cartridges.
- Models can be designed to accept single open end cartridges.
- Swing bolt closure allows for quick element change out.
- For drawings, flow charts, custom applications and filter cartridge information please visit www.fil-trek.com

Fil-Trek Corporation
70 Fleming Drive
Cambridge, ON N1T 2B1
(519) 623-7448
info@fil-trek.com
www.fil-trek.com

GLH SERIES

cartridge filter housings
asme design
universal

Housing Specifications

Inlet/Outlet: 3"-20" Flange

Dirty Drain: 2"NPT

Clean Drain: 2"NPT

Vent: 1/2"NPT

Gauges: 1/2" NPT

GLH Series ASME/NB/CE/CRN

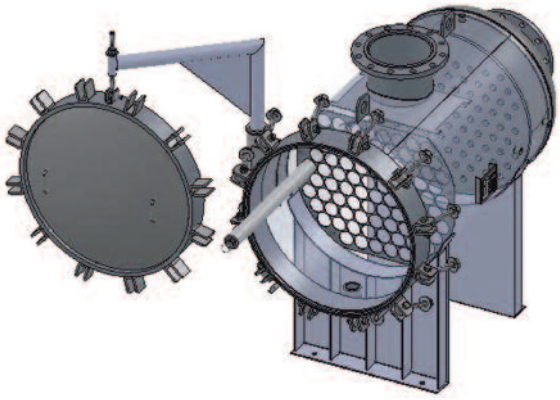

Model	No. of filters (2 1/2")	Flow Rate (gpm)	Max. Inlet/outlet size
GLH12	12	240	3"
GLH13	14	280	3"
GLH14	17	340	4"
GLH16	20	400	4"
GLH18	29	580	5"
GLH20	34	680	5"
GLH22	42	840	5"
GLH24	53	1060	8"
GLH26	62	1240	8"
GLH28	70	1400	8"
GLH30	87	1740	10"
GLH32	103	2060	10"
GLH34	110	2200	12"
GLH36	126	2520	14"
GLH38	140	2800	14"
GLH40	150	3000	14"
GLH42	178	3560	14"
GLH44	190	3800	14"
GLH46	205	4100	14"
GLH48	225	4500	16"
GLH50	245	4900	16"
GLH52	266	5320	16"
GLH54	290	5800	18"
GLH56	316	6320	18"
GLH58	335	6700	18"
GLH60	360	7200	20"
GLH62	390	7880	20"
GLH64	410	8200	20"
GLH66	450	9000	22"

Flow rates based on water at 5gpm/10" (assuming 40" cartridges). Actual flow rate is dependent on fluid viscosity, cartridge micron rating, contaminant and type of media

Fil-Trek Product Nomenclature

S4 GLH 30 087 4 10F

Material:
Carbon (blank), SS304 (S4), SS316 (S6)

Series:
GLH

Diameter of Housing:
Refer to chart above

Number of Cartridges (2 1/2"):
Refer to chart above

Length of Cartridges:
30", 40", 50"

Size of Inlet/Outlet:
Flange (F)

Fil-Trek Corporation
70 Fleming Drive
Cambridge, ON N1T 2B1
(519) 623-7448
info@fil-trek.com
www.fil-trek.com

Fil-Trek

Fulflo® Honeycomb™ Filter Cartridges

- Cotton
- Rayon
- Polyester
- Polypropylene
- Nylon
- Glass

Wound Depth Series

Multipurpose Filtration Solutions With Parker's Wound Depth Cartridges

Parker Process Filtration has been a leader in filter media innovation and performance since we first invented the Honeycomb™ Filter Tube over 65 years ago. Parker has the world's largest manufacturing capacity for wound cartridges, offering superior quality along with technical, engineering and marketing support.

Effective removal ratings at nominal 90% efficiency from 0.5µm to 150µm range.

Applications

- Animal Oils
- Concentrated Alkalies
- Dilute Acids & Alkalies
- Mineral Acids
- Organic Acids & Solvents
- Oxidizing Agents
- Petroleum Oils
- Photo Solutions
- Potable Liquids
- Vegetable Oils
- Water
- Prefilter for Membranes
- Amines

Features and Benefits

- A broad range of media provide excellent compatibility with a variety of organic solvents, animal, petroleum and vegetable oils.
- Optional core covers and end treatments assure fiber migration control.
- Multiple length cartridges minimize changeout time, eliminate spacers and are available to fit competitive filter vessels.
- FDA grade polypropylene (DOE only) cartridges certified to ANSI/NSF61 standard for contact with drinking water components.
- Continuous strand winding geometry provides performance consistency
- One-piece metal extended center core option eliminates the need for cartridge guides in all competitive and Fulflo® multicartridge vessels.
- A special snap-in extender is available for polypropylene cores.
- Cotton, rayon, polypropylene, nylon and polyester materials are FDA listed as acceptable for potable and edible liquid contact according to CFR Title 21.
- Various O-ring and end cap options are available..

Process Filtration Division

Bulletin C-1000 Eff. 11/99, Rev. 08/02
© 2000 Parker Hannifin Corporation
All Rights Reserved

WARNING! FAILURE OR IMPROPER SELECTION OR IMPROPER USE OF THE PRODUCTS AND/OR SYSTEMS DESCRIBED HEREIN OR RELATED ITEMS CAN CAUSE DEATH, PERSONAL INJURY AND PROPERTY DAMAGE.
This document and other information from Parker Hannifin Corporation, its subsidiaries and authorized distributors provide product and/or system options for further investigation by users having technical expertise. It is important that you analyze all aspects of your application and review the information concerning the product or system in the current product catalog. Due to the variety of operating conditions and applications for these products or systems, the user, through its own analysis and testing, is solely responsible for making the final selection for the products and systems and assuring that all performance, safety and warning requirements of the application are met.

Parker Filtration

Specifications

Wound Depth Cartridge Design and Function

Wound cartridges provide true depth filtration utilizing hundreds of tapered filtering passages of controlled size and shape. Each layer of roving contributes to true depth filtration by trapping its share of particles. Wound cartridges offer a gradual pressure increase during cartridge life versus surface-type media that have an abrupt flow cutoff when loaded. In addition, the irregular outer layer reduces surface blinding, assuring both longer cartridge life and full cartridge utilization.

Ultrafine Wound Depth Cartridges for Critical Filtration Applications

Ultrafine cartridges are a unique member of the Honeycomb™ wound depth cartridge family. They are specifically designed for critical filtration applications in the 0.5µm range. When absolute 0.5µm filtration is required, the nominal Ultrafine cartridge can be used as a prefilter, thereby significantly extending membrane life. Ultrafine cartridges remove 90% of particles larger than 0.5µm in size. This type of filtration provides excellent protection for equipment or processes that must be protected from fine particles.

Applications include:

- Prefilter for membranes
- Rinse water in semiconductor manufacturing
- Fine filtration for ultrasonic parts, washer solvents and other high-purity solvents
- Prefilter for industrial reverse osmosis equipment

Ultrafine Ordering Information

M — *Filter Medium*

C = FDA Grade Cotton
E = FDA Grade Rayon
M = FDA Grade Polypropylene
T = Industrial Grade Polypropylene
WC = Industrial Grade White Cotton

10 — *Nominal Length*

9-4 = 9-7/8
10 = 10
19-4 = 19-1/2
20 = 20
29-4 = 29-1/4
30 = 30-3/16
39 = 39
40 = 40-3/16

A — *Core Material*

No Symbol = Tinned Steel
A = Polypropylene
A3 = Glass Filled Polypropylene
G = 304 Stainless Steel
S = 316 Stainless Steel

Y — *Core Cover Material*

No Symbol = No Cover
B = Nylon
V = Nonwoven Polyester
W = Cellulosic Paper
Y = Polypropylene

XA — *End Cap Configuration*

None = DOE (without gaskets)
– DO = DOE (With Gaskets)
– TC = 222/Closed
– OB = Std. Open End/Polypro Spring Closed End
– TF = 222/Fin
– SC = 226/Closed
– SF = 226/Fin
XA = Polypro Extender
– XB = Ex.Core Open End/Polypro Spring Closed End
XC = Extended Metal

Specifications

Wound Cartridge Flow Factors for Aqueous (Water Based) Fluids (psid/gpm @ 1 cks)

Rating *(µm)*	Polypropylene Polyester Nylon	Cotton Rayon	Glass
0.5	0.9924	2.6590	0.5000
1	0.7463	2.0000	0.4211
3	0.3330	0.6250	0.3478
5	0.2381	0.3636	0.1951
10	0.1429	0.1931	0.1430
20	0.0898	0.1075	0.1096
30	0.0704	0.0855	0.0816
50	0.0595	0.0709	0.0678
75	0.0538	0.0645	0.0611
100	0.0500	0.0624	0.0590

Wound Cartridge Flow Factors for Nonaqueous (Solvent or Oil Based) Fluids (psid/gpm @ 1 cks)

Rating (µm)	Polypropylene Polyester Nylon	Cotton Rayon	Glass
0.5	1.8350	1.3800	0.5000
1	1.0000	0.7519	0.4211
3	0.5800	0.3003	0.3478
5	0.3003	0.1949	0.1951
10	0.1299	0.1000	0.1430
20	0.0560	0.0350	0.1096
30	0.0200	0.0175	0.0816
50	0.0141	0.0130	0.0678
75	0.0120	0.0100	0.0611
100	0.0080	0.0065	0.0590

Wound Cartridge Length Factors

Length *(in)*	Length Factor
10	1.0
20	2.0
30	3.0
40	4.0
50	5.0

Flow Rate and Pressure Drop Formulae:

$$\textbf{Flow Rate (gpm)} = \frac{\text{Clean } \Delta P \text{ x Length Factor}}{\text{Viscosity x Flow Factor}}$$

$$\textbf{Clean } \Delta \textbf{P} = \frac{\text{Flow Rate x Viscosity x Flow Factor}}{\text{Length Factor}}$$

Notes:
1. **Clean ΔP** is PSI differential at start.
2. **Viscosity** is centistokes.
   Use Conversion Tables for other units.
3. **Flow Factor** is ΔP/GPM at 1 cks for 10 in (or single).
4. **Length Factors** convert flow or ΔP from 10 in (single length) to required cartridge length.

Wound Cartridge Nominal Micrometer Ratings

Cartridge Designation	Rating *(µm)*	Compressed Air and Gas Micron Rating
8R, E8R, N8R, U8R, S8R, M8R, R8R, T8R, WC8R	100	15
10R, E10R, N10R, U10R, S10R, R10R, T10R, M10R, WC10R	75	13
11R, E11R, N11R, U11R, S11R, M11R, R11R, T11R, WC11R	50	12
12R, E12R, N12R, U12R, S12R, M12R, R12R, T12R, WC12R	40	—
13R, E13R, N13R, U13R, S13R, M13R, R13R, T13R, WC13R	30	10
15R, E15R, N15R, U15R, S15R, M15R, R15R, T15R, WC15R	20	7
17R, E17R, N17R, U17R, S17R, M17R, R17R, T17R, WC17R	15	5
19R, E19R, N19R, U19R, S19R, M19R, R19R, T19R, WC19R	10	3
21R, E21R, N21R, U21R, S21R, M21R, R21R, T21R, WC21R	7	—
23R, E23R, N23R, U23R, S23R, M23R, R23R, T23R, WC23R	5	2
27R, E27R, N27R, U27R, S27R, M27R, R27R, T27R, WC27R	3	1
39R, E39R, N39R, U39R, S39R, M39R, R39R, T39R, WC39R	1	Less than 1
Ultrafine (C, E, M, T, WC)	0.5	Less than 0.5

Specifications

Nominal Removal Ratings:
- @ 90% efficiency from 0.5µm to 150µm

Maximum Recommended Operating Conditions:
- Change Out ΔP: 30 psi (2.1 bar)
- ΔP @ Ambient Temperature: 60 psi (4.1 bar)
- Flow Rate: 10 gpm (38 lpm) per 10 in length
- Temperature (See table below)

Dimensions:
- 1 in ID x 2-7/16 OD
- 3 in to 50 in lengths

Wound Cartridge Glass Fiber Nominal Micrometer Ratings

Cartridge Designation	Liquids	Compressed Air and Gases
K5B	100 - 150	100+
K5R	75 - 100	10
K6R	40	7
K8R	30	5
K10R	20	3
K12R	15	1
K15R	10	<1
K19R	5	<1
K23R	3	<1
K27R	1	<1
K39R	0.5	<1

Note: All glass cartridges have standard glass core cover.

Maximum Operating Temperature @ 35 psid

Cartridge Material	Metal Core	Polypropylene Core	Glass-Filled Polypropylene
Cotton	250°F (121°C)	120°F (49°C)	—
Glass	750°F (402°C)	—	—
Nylon	275°F (135°C)	120°F (49°C)	—
Polypropylene	200°F (93°C)	120°F (49°C)†	200°F (93°C)
Polyester	275°F (135°C)	120°F (49°C)	—
Rayon	250°F (121°C)	120°F (49°C)	—

Note: Refer Material Selection Guide for additional compatibility information.

Ordering Information

T — *Filter Medium*

No Symbol = Cotton (FDA)
E = FDA Grade Rayon
K = Baked Glass Fiber
M = FDA Grade Polypropylene
N = Nylon (FDA)
R = Rayon
S = Polyester (FDA)
T = Industrial Grade Polypropylene
U = Natural Cotton
UK = Unbaked Glass Fiber
WC = White Cotton

13R — *Density Number* / *Micron Rating (um)*

Density Number	Micron Rating (um)
6R	150
8R	100
10R	75
11R	50
12R	40
13R	30
14R	25
15R	20
17R	15
19R	10
21R	7
23R	5
27R	3
39R	1

30 — *Nominal Cartridge Length (in)*

3 = 3
4 = 4
5 = 5
6 = 6
7 = 7
8 = 8
9-4 = 9-7/8
10 = 10
19-4 = 19-1/2
20 = 20
29-4 = 29-1/4
30 = 30-3/16
39-4 = 39
40 = 40-3/16
50 = 50

Nominal Cartridge Diameter

No Symbol = 1 in ID x 2-7/16 in OD
–2 = 1 in ID x 2-11/16 in OD
–45 = 1 in ID x 4-1/2 in OD (9-7/8 and 20 in length only) for Fulflo LTG and Ametek Big Blue Vessels

A — *Core Material*

No Symbol = Tinned Steel
A = Polypropylene
A3 = Glass-Filled Polypropylene
G = 304 Stainless Steel
S = 316 Stainless Steel
SR = Passivated 316 SS (Special Order)

Y — *Core Cover Material*

No Symbol = No Cover
B = Nylon
V = Nonwoven Polyester
W = Cellulosic Paper
Y = Polypropylene

M — *End Treatment*

No Symbol = No Treatment
D = Sodium Silicate
L = Lacquer
M = Singed

XA — *End Cap Configuration*

None = DOE (without gaskets)
– DO = DOE (With Gaskets)
– OB = Std. Open End/Polypro Spring Closed End
– TC = 222/Closed
– TF = 222/Fin
– SC = 226/Closed
– SF = 226/Fin
XA = Polypro Extender
– XB = Ex.Core Open End/Polypro Spring Closed End
XC = Extended Metal

—— *Seal Material*

None = Standard DOE
A = Poly-ethylene
E = EPR
N = Buna N
S = Silicone
V = Viton*

Note: Consult factory for other options.

Process Filtration Division

* A trademark of E. I. duPont de Nemours & Co.

Parker Hannifin Corporation
Process Filtration Division
6640 Intech Boulevard
Indianapolis, Indiana 46278
Toll Free 1-888-C-FULFLO (238-5356)
Telephone (317) 275-8300
Fax (317) 275-8410
http://www.parker.com

Parker Filtration

Vitec™ 4000

NSF Certified
Silica Scale Inhibitor and Dispersant

avista® technologies

Performance:

Vitec™ 4000 antiscalant offers a variety of critical performance and application benefits:

* Protects membranes from silica scale when used in accordance with published limitations of 250 ppm of SiO_2 in the RO concentrate.

* Certified by the National Sanitation Foundation (NSF) under ANSI/NSF 60 for use in systems producing potable water.

* Powerful inhibitor against a variety of carbonate and sulfate scale:

  Calcium Carbonate ($CaCO_3$)
  Langelier Saturation Index (LSI) >2.5

  Calcium Sulfate ($CaSO_4$)
  3.5 times saturation

  Barium Sulfate ($BaSO_4$)
  105 times saturation

  Strontium Sulfate ($SrSO_4$)
  20 times saturation

  Calcium Fluoride (CaF)
  1000 times saturation

* Dispersant qualities reduce colloidal and silt fouling of membrane surfaces.

* Excellent dispersant for alum particles.

* Compatible with all of the RO membranes produced by the leading manufacturers.

Avista Technologies Inc.
133 North Pacific Street
San Marcos, CA 92069 USA
Phone: 760 744-0536
Fax: 760 744-0619
www.avistatech.com

Vitec™ 4000 is a proprietary liquid antiscalant designed to inhibit silica, sulfate, and carbonate scales and disperse colloidal particles in cellulose acetate and thinfilm membrane separation systems.

This formulation is unique in that it inhibits silica scaling at higher concentrations than typical antiscalants, a feature which may allow significantly increased RO system recovery in high silica feedwaters. It retains its performance even in RO concentrate streams containing up to 4 ppm of ferrous iron.

Application:

Optimum Vitec™ 4000 performance is achieved when the chemical is injected downstream of multimedia filters and upstream of cartridge filters. In systems using sulfuric acid (H2SO4), the best results are obtained when the acid is injected far enough upstream to ensure it is adequately mixed prior to the Vitec™ 4000 injection point.

Dilution:

The maximum dilution for Vitec™ 4000 should not exceed 10%. This guideline will protect the effectiveness of the internal bacteriostat, which inhibits bacterial growth within the drum and feed tank.

Dosing Guidelines:

Typical dosage ranges are between 2 to 5 ppm. A site-specific dose can be determined using the Avista computer program.

Like any injected chemical, over or underdosing may cause unnecessary membrane system fouling. Please contact the Avista customer service department for customized dosing instructions.

Packaging and Storage:

Vitec™ 4000 is available in 45 pound pails, 500 pound plastic drums, and 2500 pound totebins. Tanker volumes are also available.

This product should be protected from freezing during storage as the active ingredients may separate under extreme temperatures. If freezing occurs, warm the chemical until it returns to the liquid state and stir to recombine.

Properties:

Appearance:	Clear, amber liquid
pH:	5.5 – 6.5
Viscosity:	13 cp a 25°C
Freeze Point:	-8°C (18°F)
Specific	1.1 – 1.2

NSF
Certified to NSF/ANSI 60

DRINKING WATER TREATMENT ADDITIVES CLASSIFIED BY NSF INTERNATIONAL TO NSF/ANSI 60 ON SEPTEMBER 2004 AS STANDARD DRINKING WATER TREATMENT CHEMICAL FOR USE IN REVERSE OSMOSIS SYSTEMS AT A MAXIMUM LEVEL OF 7 mg/l

Avista Technologies
Avista Advisor

Project Details

Project:	Unknown
Permeate Flowrate:	0m3/hour
System Recovery:	82%
Water Source:	Unknown
Water Temperature:	17 degrees C

Water Analysis

Ion	Feed Water	Adjusted Feed	Concentrate	
Sodium	200.00	200.00	1100.06	mg/l
Potassium	20.00	20.00	109.68	mg/l
Calcium	152.00	152.00	843.14	mg/l
Magnesium	61.00	61.00	338.25	mg/l
Iron	0.00	0.00	0.00	mg/l
Manganese	0.02	0.02	0.10	mg/l
Barium	0.15	0.15	0.83	mg/l
Strontium	1.50	1.50	8.32	mg/l
Aluminium	0.00	0.00	0.00	mg/l
Chloride	312.00	312.00	1717.88	mg/l
Sulfate	320.00	320.00	1775.03	mg/l
Bicarbonate	366.12	366.12	1997.03	mg/l
Nitrate	20.00	20.00	106.35	mg/l
Fluoride	1.00	1.00	5.51	mg/l
Phosphate	0.00	0.00	0.00	mg/l
Silica	41.00	41.00	225.67	mg/l
TDS		1494.79	8227.84	
pH	7.70	7.70	8.43	

Product Choice

Product Selection:	Vitec 4000
Dosage:	6.90mg/l
Usage:	0.00 lb per day

Application

Dosed Solution Strength: 100%

Pump Rate: 0.00USGPD

133 North Pacific Street
San Marcos, CA 92069
Phone: +1 (760) 744 0536
Fax: +1 (760) 744 0619

PO Box 28612
Edinburgh, EH14 5ZL
Phone: +44 131 449 6677
Fax: +44 131 449 5599

Scaling Potential.

Langelier Saturation Index (LSI)

The reject stream has a LSI of 2.51.
Vitec 4000 has a limit of 3.00

Calcium Carbonate Precipitation Potential (CCPP)

The concentrate has a CCPP of 847mg/l.
This is within the limits of Vitec 4000

Calcium Sulfate

The concentrate has a calcium sulfate saturation of 90.08%.
This is within the limits of Vitec 4000

Barium Sulfate

The concentrate has a barium sulphate saturation of 7191.13%.
This is within the limits of Vitec 4000

Strontium Sulfate

The reject stream has a Strontium Sulfate saturation of 40.50%.
This is within the limit of Vitec 4000

Calcium Fluoride

The reject stream has a Calcium Fluoride saturation of 1106.04%.
This is within the limit of Vitec 4000

Silica

The reject stream has a Silica level of 225.67mg/l.
This is within the limit of Vitec 4000

Calcium Phosphate

No phosphate was included in the feed water analysis.
At these design conditions and product dose, 25.6mg/l of phosphate could be tolerated

While every effort has been made to ensure the accuracy of this program, no warranty, expressed or implied, is given as actual application of the products is outside the control of Avista Technologies.

133 North Pacific Street
San Marcos, CA 92069
Phone: +1 (760) 744 0536
Fax: +1 (760) 744 0619

PO Box 28612
Edinburgh, EH14 5ZL
Phone: +44 131 449 6677
Fax: +44 131 449 5599

Avista Technologies
Avista Advisor

Project Details

Project:	Unknown
Permeate Flowrate:	0m3/hour
System Recovery:	82%
Water Source:	Unknown
Water Temperature:	17 degrees C

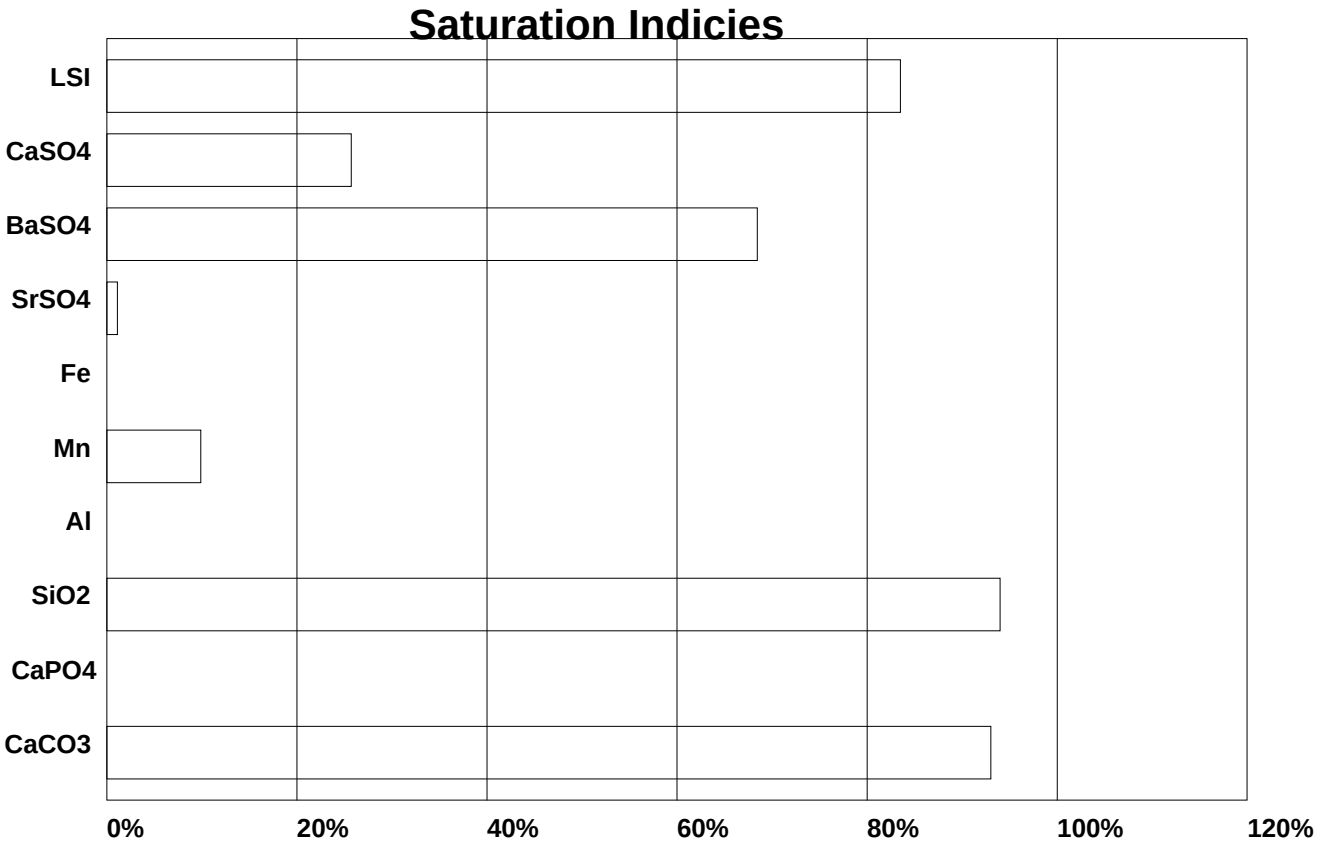

Product Choice

Product Selection:	Vitec 4000
Dosage:	6.90ppm
Usage:	0.00 lb per day

Application

Dosed Solution Strength: 100%
Pump Rate: 0.0USGPD

133 North Pacific Street
San Marcos, CA 92069
Phone: +1 (760) 744 0536
Fax: +1 (760) 744 0619

PO Box 28612
Edinburgh, EH14 5ZL
Phone: +44 131 449 6677
Fax: +44 131 449 5599

FILMTEC™ Membranes

FILMTEC NF90-400 Nanofiltration Element

Features

The FILMTEC™ NF90-400 nanofiltration element is a high area, high productivity element designed to remove a high percentage of salts, nitrate, iron and organic compounds such as pesticides, herbicides and THM precursors.

The high active area membrane combined with low net driving pressure of the membrane allows the removal of these compounds at low operating pressure.

Product Specifications

Product	GMID	Nominal Active Surface Area ft^2 (m^2)	Product Water Flow Rate gpd (m^3/d)	Stabilized Salt Rejection (%)
NF90-400	149985	400 (37)		
NaCl			7,500 (28.4)	85 - 95
$MgSO_4$			9,500 (36.0)	>97

1. Permeate flow and salt passage based on the following test conditions:
   2,000 mg/l NaCl, 70 psi (0.48 MPa), 77°F (25°C) and 15% recovery.
   2,000 mg/l $MgSO_4$, 70 psi (0.48 MPa), 77°F (25°C) and 15% recovery.
2. Flow rates for individual elements may vary +/-15%.
3. The above specifications are benchmark values. Please be sure to operate according to our system design guidelines.

Figure 1

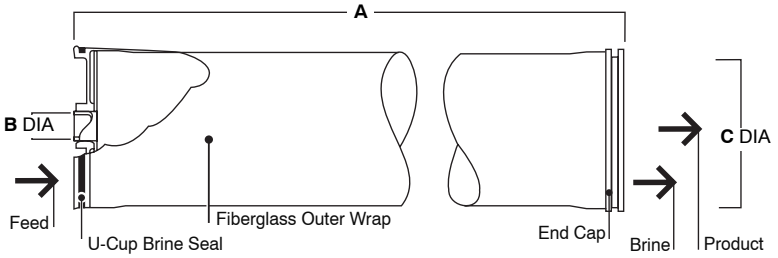

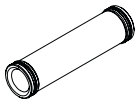

FilmTec supplies coupler part number 259171 with each element. Each coupler includes two 2-125 EPR o-rings (FilmTec part number 216370).

Product	Single-Element Recovery	Dimensions – Inches (mm) A	B	C
NF90-400	15%	40 (1,016)	1.5 (38)	7.9 (201)

1. Refer to FilmTec Design Guidelines for multiple-element applications and recommended element recovery rates for various feed sources. 1 inch = 25.4 mm
2. Element to fit nominal 8.00-inch (203 mm) I.D. pressure vessel.

Operating Limits

• Membrane Type	Polyamide Thin-Film Composite
• Maximum Operating Temperature	113°F (45°C)
• Maximum Operating Pressure	600 psig (41 bar)
• Maximum Pressure Drop	15 psig (1.0 bar)
• pH Range, Continuous Operation[a]	3 - 10
• pH Range, Short-Term Cleaning (30 min.)[b]	1 - 13
• Maximum Feed Flow	70 gpm (15.9 m^3/hr)
• Maximum Feed Silt Density Index	SDI 5
• Free Chlorine Tolerance[c]	<0.1 ppm

[a] Maximum temperature for continuous operation above pH 10 is 95°F (35°C).
[b] Refer to Cleaning Guidelines in specification sheet 609-23010.
[c] Under certain conditions, the presence of free chlorine and other oxidizing agents will cause premature membrane failure. Since oxidation damage is not covered under warranty, FilmTec recommends removing residual free chlorine by pretreatment prior to membrane exposure. Please refer to technical bulletin 609-22010 for more information.

™® Trademark of The Dow Chemical Company ("Dow") or an affiliated company of Dow

Important Information

Proper start-up of reverse osmosis water treatment systems is essential to prepare the membranes for operating service and to prevent membrane damage due to overfeeding or hydraulic shock. Following the proper start-up sequence also helps ensure that system operating parameters conform to design specifications so that system water quality and productivity goals can be achieved.

Before initiating system start-up procedures, membrane pretreatment, loading of the membrane elements, instrument calibration and other system checks should be completed.

Please refer to the application information literature entitled “Start-Up Sequence” (Form No. 609-02077) for more information.

Operation Guidelines

Avoid any abrupt pressure or cross-flow variations on the spiral elements during start-up, shutdown, cleaning or other sequences to prevent possible membrane damage. During start-up, a gradual change from a standstill to operating state is recommended as follows:

- Feed pressure should be increased gradually over a 30-60 second time frame.
- Cross-flow velocity at set operating point should be achieved gradually over 15-20 seconds.
- Permeate obtained from first hour of operation should be discarded.

General Information

- Keep elements moist at all times after initial wetting.
- If operating limits and guidelines given in this bulletin are not strictly followed, the limited warranty will be null and void.
- To prevent biological growth during prolonged system shutdowns, it is recommended that membrane elements be immersed in a preservative solution.
- The customer is fully responsible for the effects of incompatible chemicals and lubricants on elements.
- Maximum pressure drop across an entire pressure vessel (housing) is 50 psi (3.4 bar).
- Avoid permeate-side backpressure at all times.

FILMTEC™ Membranes
For more information about FILMTEC membranes, call the Dow Liquid Separations business:

North America:	1-800-447-4369
Latin America:	(+55) 11-5188-9222
Europe:	(+32) 3-450-2240
Pacific:	+60 3 7958 3392
Japan:	+813 5460 2100
China:	+86 21 2301 9000

http://www.filmtec.com

Notice: The use of this product in and of itself does not necessarily guarantee the removal of cysts and pathogens from water. Effective cyst and pathogen reduction is dependent on the complete system design and on the operation and maintenance of the system.

Notice: No freedom from any patent owned by Seller or others is to be inferred. Because use conditions and applicable laws may differ from one location to another and may change with time, Customer is responsible for determining whether products and the information in this document are appropriate for Customer’s use and for ensuring that Customer’s workplace and disposal practices are in compliance with applicable laws and other governmental enactments. Seller assumes no obligation or liability for the information in this document. NO WARRANTIES ARE GIVEN; ALL IMPLIED WARRANTIES OF MERCHANTABILITY OR FITNESS FOR A PARTICULAR PURPOSE ARE EXPRESSLY EXCLUDED.

™® Trademark of The Dow Chemical Company ("Dow") or an affiliated company of Dow

Form No. 609-00345-0406

Pump Performance Datasheet

Customer	: Arber Associates	Quote number	: 81820
Customer reference	:	Pump size	: 14JKH
Item number	: 001	Stages	: 3
Service	: Nanofiltration Feed Pumps	Based on curve number	: 14JKH 1770 Rev. 0
Quantity of pumps	: 4	Date last saved	: 18 May 2009 5:02 PM

Operating Conditions		Liquid	
Flow, rated	: 1,800.0 USgpm	Liquid type	: Water - Clean
Head, rated (requested)	: 280.0 ft	Additional liquid description	:
Head, rated (actual)	: 280.1 ft	Solids diameter, max	: 0.00 in
Suction pressure, rated / max	: 0.00 / 0.00 psi.g	Temperature, max	: 68.00 deg F
NPSH available, rated	: Ample	Fluid density, rated / max	: 0.998 / 0.998 SG
Frequency	: 60 Hz	Viscosity, rated	: 1.00 cP
		-	:

Performance		Material	
Pump speed, rated	: 1,770 rpm	Material requested	: 316 Stainless Steel/316 SS
Impeller diameter, rated	: 10.09 in	Material selected	: 316 Stainless Steel/316 SS
Impeller diameter, maximum	: 10.55 in		
Impeller diameter, minimum	: 9.00 in		
Efficiency (bowl / pump)	: 79.69 / 78.44 %		
NPSH required / margin required	: 15.31 / 0.00 ft		
Ns (imp. eye flow) / Nss (imp. eye flow)	: 2,339 / 9,800 US Units		
MCSF	: 537.1 USgpm		
Head, maximum, rated diameter	: 336.3 ft		
Head rise to shutoff	: 20.10 %		
Flow, best eff. point (BEP)	: 1,775.5 USgpm		
Flow ratio (rated / BEP)	: 101.38 %		
Diameter ratio (rated / max)	: 95.67 %		
Head ratio (rated dia / max dia)	: 89.93 %		
Cq/Ch/Ce [ANSI/HI 9.6.7-2004]	: 1.00 / 1.00 / 1.00		
Selection status	: Acceptable		

Pressure Data	
Maximum working pressure	: 145.5 psi.g
Maximum allowable working pressure	: 871.4 psi.g
Maximum allowable suction pressure	: N/A
Hydrostatic test pressure	: N/A

Driver & Power Data	
Driver sizing specification	: Maximum power
Margin over specification	: 0.00 %
Service factor	: 1.15
Power, hydraulic	: 127 hp
Power (bowl / pump)	: 159 / 160 hp
Power, maximum, rated diameter	: 169 hp
Minimum recommended motor rating	: 200 hp / 149 kW

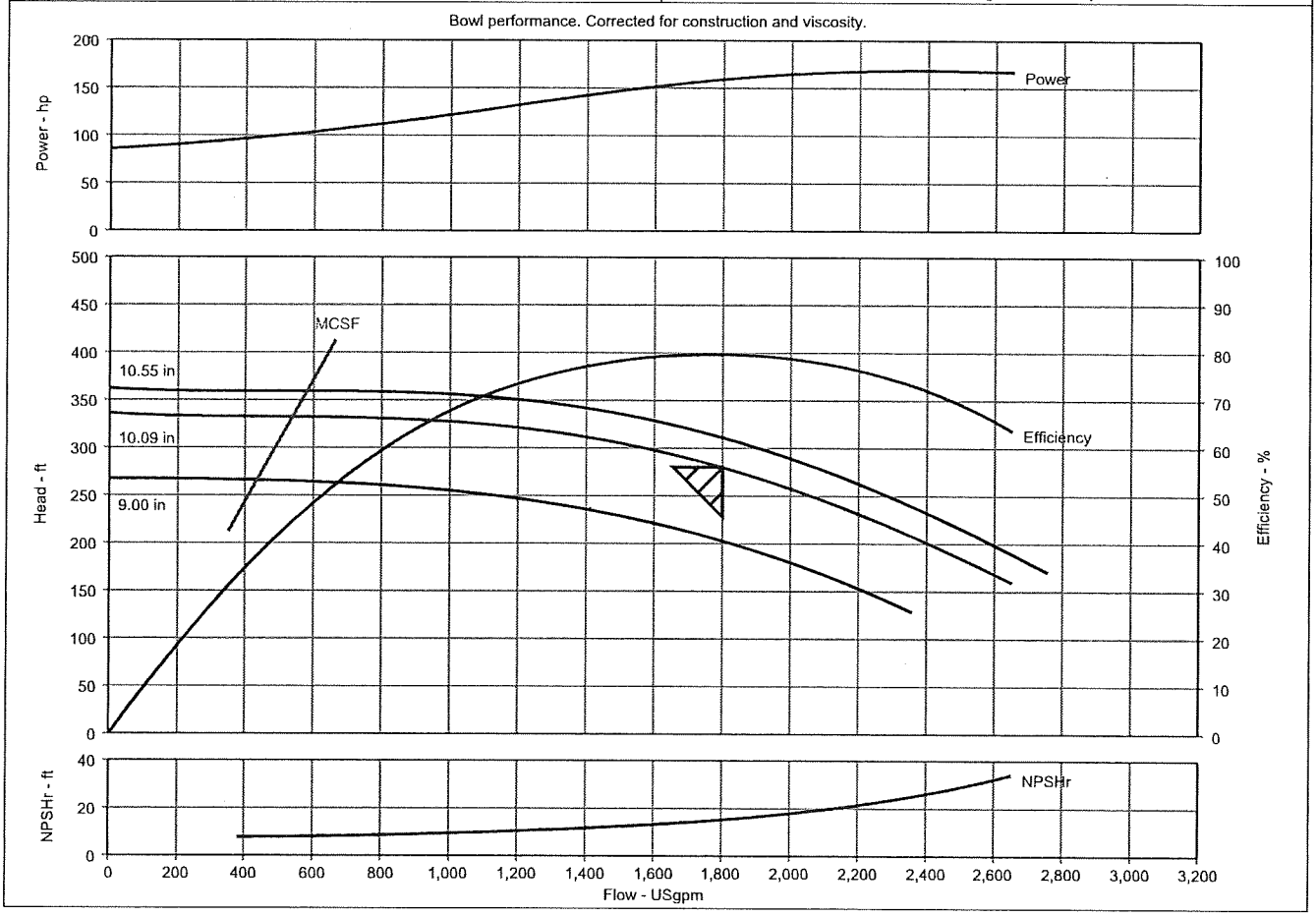

VERTICAL TURBINE PUMP

1,800.0 USgpm 280.0 ft TDH
3 STAGE TYPE 14JKH
12x10x20x20VC DISCHARGE

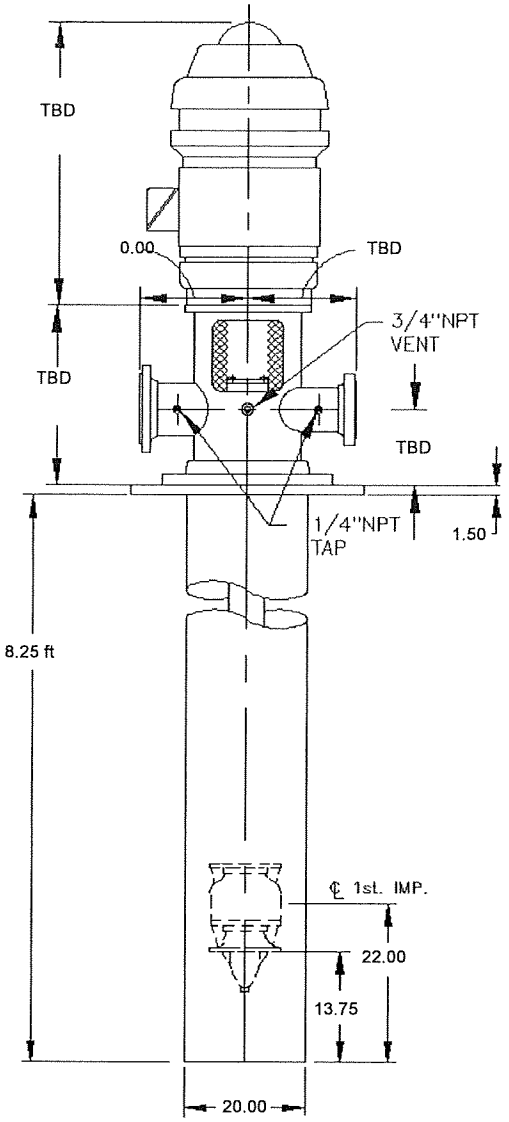

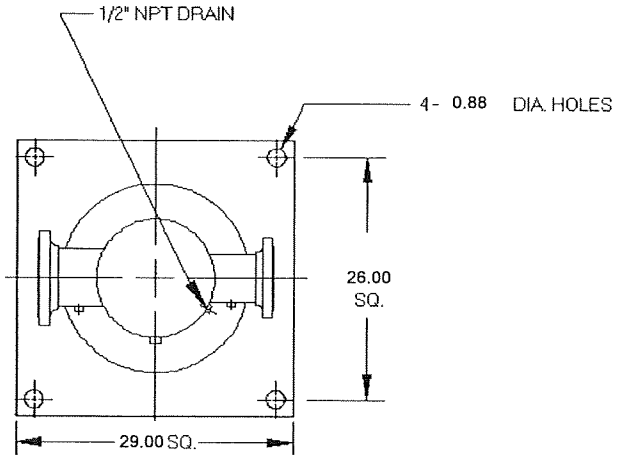

Discharge	Suction
10 in. 150#RF - ANSI Flange	12 in. 150#RF - ANSI Flange
16 in. Dia. Flange	19 in. Dia. Flange
12 - 1 in. Dia. holes	12 - 1 in. Dia. holes
14.25 in. Bolt circle	17 in. Bolt circle

NOTES:
ALL DIMENSIONS IN INCHES UNLESS OTHERWISE NOTED.
DRAWING NOT TO SCALE.
NOT TO BE USED FOR CONSTRUCTION UNLESS CERTIFIED.

REV.	BY	DATE	DESCRIPTION

Customer: Arber Associates
Customer Reference:
Item Number: 001
Curve Number: 14JKH 1770
Date: 18 May 2009

OUTLINE DRAWING

DRAWING

Pump Performance Datasheet

Customer	: Arber Associates	Quote number	: 81820
Customer reference	:	Pump size	: 14DKL
Item number	: 002	Stages	: 2
Service	: Nanofiltration Second Stage Feed Pumps	Based on curve number	: 14DKL 1770 Rev. 0
Quantity of pumps	: 3	Date last saved	: 18 May 2009 5:00 PM

Operating Conditions

Flow, rated	: 1,500.0 USgpm
Head, rated (requested)	: 120.0 ft
Head, rated (actual)	: 121.0 ft
Suction pressure, rated / max	: 0.00 / 0.00 psi.g
NPSH available, rated	: Ample
Frequency	: 60 Hz

Performance

Pump speed, rated	: 1,770 rpm
Impeller diameter, rated	: 8.69 in
Impeller diameter, maximum	: 9.12 in
Impeller diameter, minimum	: 7.50 in
Efficiency (bowl / pump)	: 78.40 / 76.29 %
NPSH required / margin required	: 14.62 / 0.00 ft
Ns (imp. eye flow) / Nss (imp. eye flow)	: 2,984 / 9,320 US Units
MCSF	: 419.9 USgpm
Head, maximum, rated diameter	: 219.1 ft
Head rise to shutoff	: 82.60 %
Flow, best eff. point (BEP)	: 1,482.5 USgpm
Flow ratio (rated / BEP)	: 101.18 %
Diameter ratio (rated / max)	: 95.21 %
Head ratio (rated dia / max dia)	: 86.49 %
Cq/Ch/Ce [ANSI/HI 9.6.7-2004]	: 1.00 / 1.00 / 1.00
Selection status	: Acceptable

Liquid

Liquid type	: Water - Clean
Additional liquid description	:
Solids diameter, max	: 0.00 in
Temperature, max	: 68.00 deg F
Fluid density, rated / max	: 0.998 / 0.998 SG
Viscosity, rated	: 1.00 cP
-	:

Material

Material requested	: 316 Stainless Steel/316 SS
Material selected	: 316 Stainless Steel/316 SS

Pressure Data

Maximum working pressure	: 94.83 psi.g
Maximum allowable working pressure	: 834.1 psi.g
Maximum allowable suction pressure	: N/A
Hydrostatic test pressure	: N/A

Driver & Power Data

Driver sizing specification	: Maximum power
Margin over specification	: 0.00 %
Service factor	: 1.15
Power, hydraulic	: 45.38 hp
Power (bowl / pump)	: 57.88 / 58.27 hp
Power, maximum, rated diameter	: 61.08 hp
Minimum recommended motor rating	: 75.00 hp / 55.93 kW

Bowl performance. Corrected for construction and viscosity.

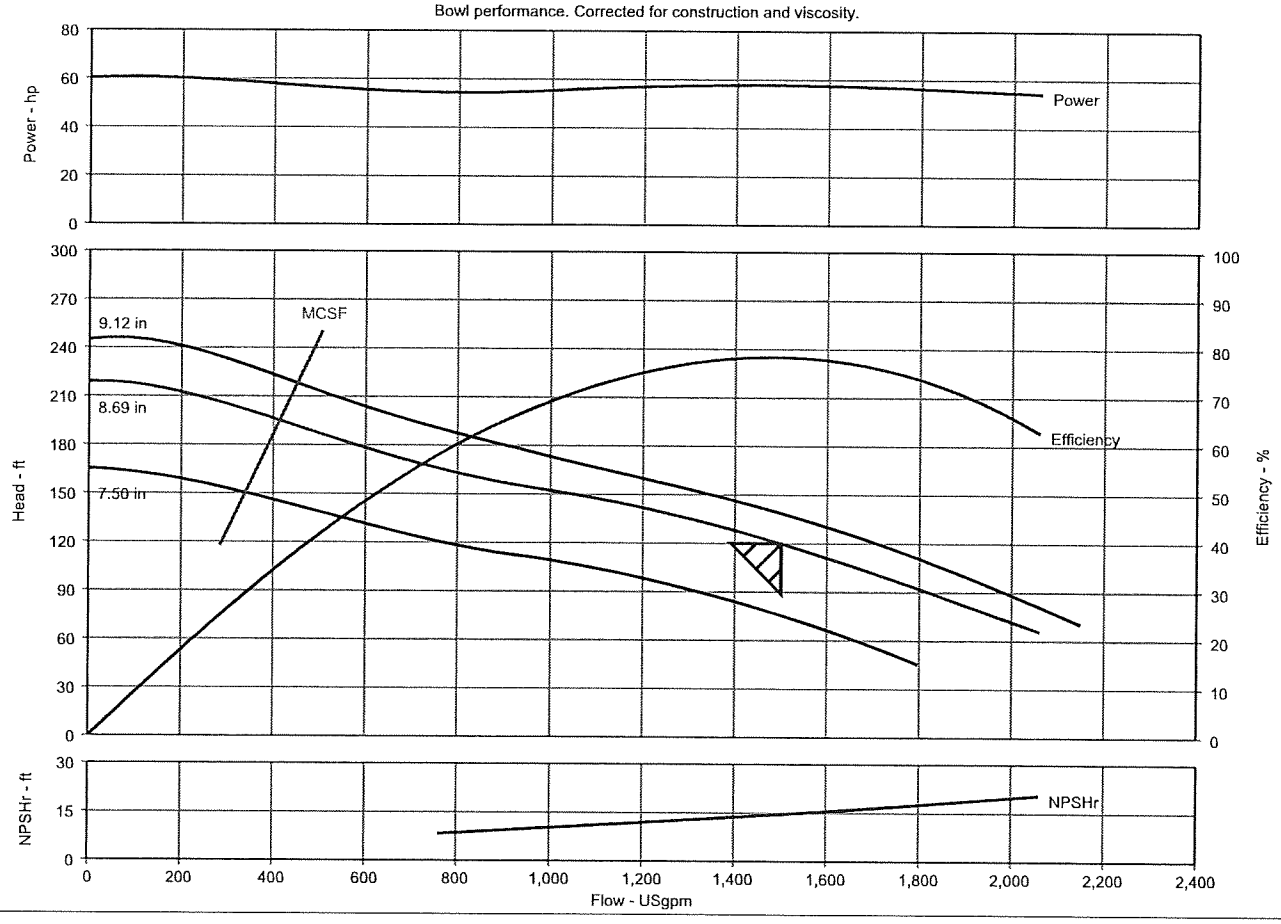

VERTICAL TURBINE PUMP

1,500.0 USgpm 120.0 ft TDH
2 STAGE TYPE 14DKL
10x10x16.5x18VC DISCHARGE

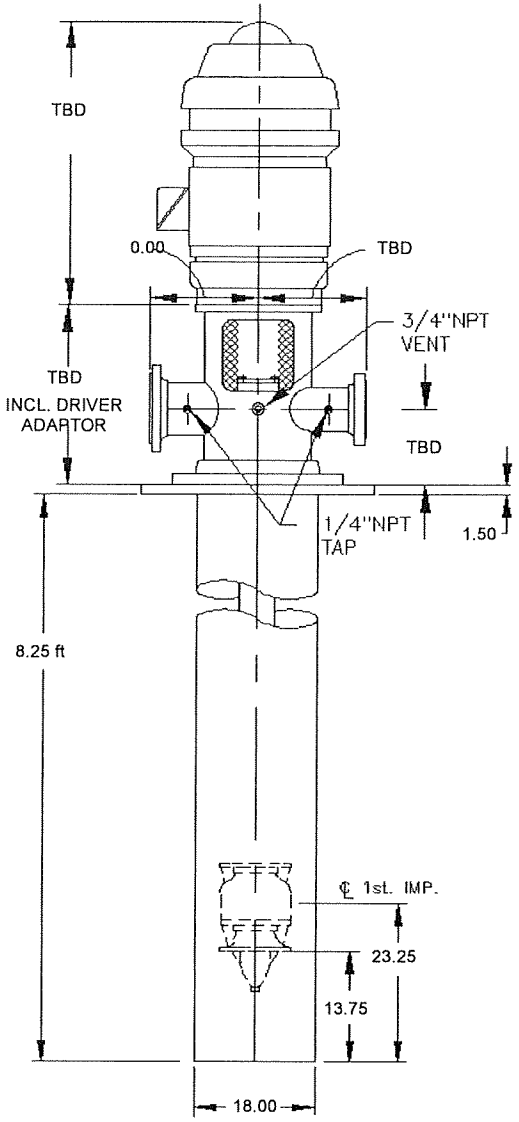

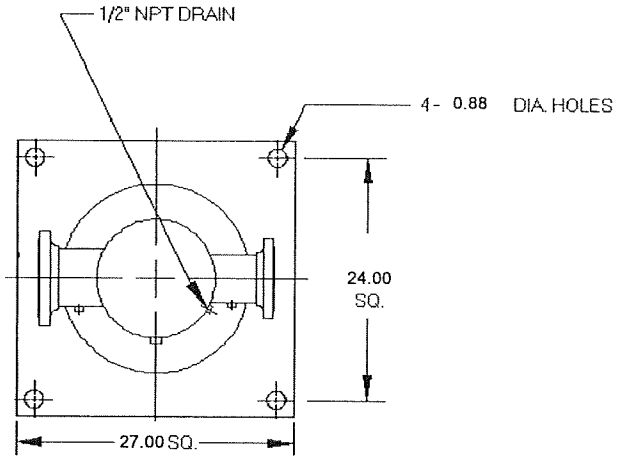

Discharge	Suction
10 in. 150#RF - ANSI Flange	10 in. 150#RF - ANSI Flange
16 in. Dia. Flange	16 in. Dia. Flange
12 - 1 in. Dia. holes	12 - 1 in. Dia. holes
14.25 in. Bolt circle	14.25 in. Bolt circle

NOTES:
ALL DIMENSIONS IN INCHES UNLESS OTHERWISE NOTED.
DRAWING NOT TO SCALE.
NOT TO BE USED FOR CONSTRUCTION UNLESS CERTIFIED.

REV.	BY	DATE	DESCRIPTION

Customer: Arber Associates
Customer Reference:
Item Number: 002
Curve Number: 14DKL 1770
Date: 18 May 2009

OUTLINE DRAWING

DRAWING

Pump Performance Datasheet

Customer	: Arber Associates	Quote number	: 81820
Customer reference	:	Pump size	: 16DKL
Item number	: 003	Stages	: 2
Service	: Finished Water	Based on curve number	: 16DKL 1770 Rev. 0
Quantity of pumps	: 3	Date last saved	: 18 May 2009 4:51 PM

Operating Conditions		Liquid	
Flow, rated	: 2,900.0 USgpm	Liquid type	: Water - Clean
Head, rated (requested)	: 210.0 ft	Additional liquid description	:
Head, rated (actual)	: 211.1 ft	Solids diameter, max	: 0.00 in
Suction pressure, rated / max	: 0.00 / 0.00 psi.g	Temperature, max	: 68.00 deg F
NPSH available, rated	: Ample	Fluid density, rated / max	: 0.998 / 0.998 SG
Frequency	: 60 Hz	Viscosity, rated	: 1.00 cP
		-	:

Performance		Material	
Pump speed, rated	: 1,770 rpm	Material requested	: Auto
Impeller diameter, rated	: 10.53 in	Material selected	: Cast Iron/Bronze
Impeller diameter, maximum	: 11.03 in		
Impeller diameter, minimum	: 9.75 in		
Efficiency (bowl / pump)	: 82.60 / 81.42 %		
NPSH required / margin required	: 18.15 / 0.00 ft		
Ns (imp. eye flow) / Nss (imp. eye flow)	: 3,196 / 8,530 US Units		
MCSF	: 826.0 USgpm		
Head, maximum, rated diameter	: 313.2 ft		
Head rise to shutoff	: 49.16 %		
Flow, best eff. point (BEP)	: 3,242.7 USgpm		
Flow ratio (rated / BEP)	: 89.43 %		
Diameter ratio (rated / max)	: 95.46 %		
Head ratio (rated dia / max dia)	: 91.03 %		
Cq/Ch/Ce [ANSI/HI 9.6.7-2004]	: 1.00 / 1.00 / 1.00		
Selection status	: Acceptable		

Pressure Data	
Maximum working pressure	: 135.6 psi.g
Maximum allowable working pressure	: 295.0 psi.g
Maximum allowable suction pressure	: N/A
Hydrostatic test pressure	: N/A

Driver & Power Data	
Driver sizing specification	: Maximum power
Margin over specification	: 0.00 %
Service factor	: 1.15
Power, hydraulic	: 154 hp
Power (bowl / pump)	: 186 / 187 hp
Power, maximum, rated diameter	: 190 hp
Minimum recommended motor rating	: 200 hp / 149 kW

Bowl performance. Corrected for construction and viscosity.

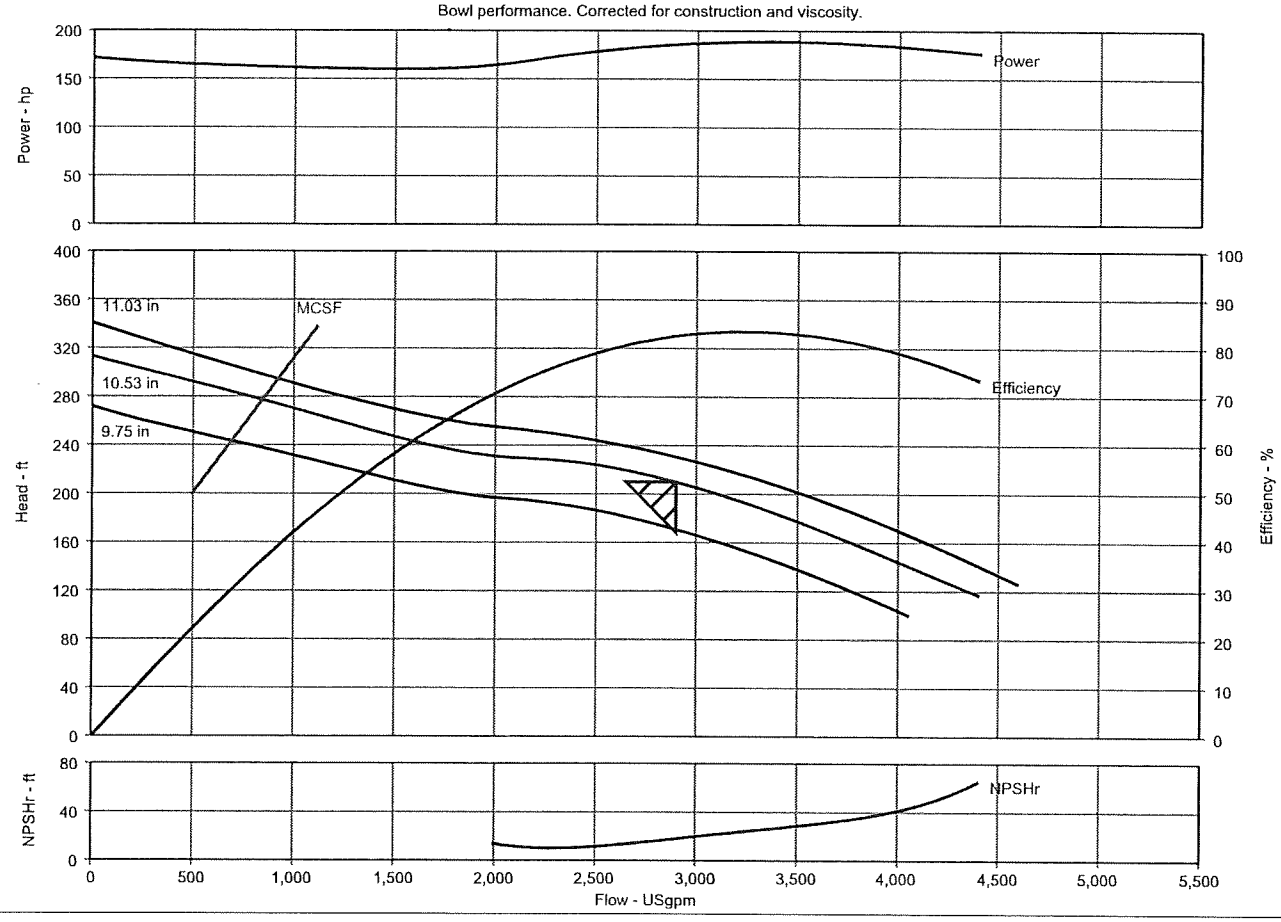

VERTICAL TURBINE PUMP

2,900.0 USgpm 210.0 ft TDH
2 STAGE TYPE 16DKL
12x16.5F DISCHARGE HEAD

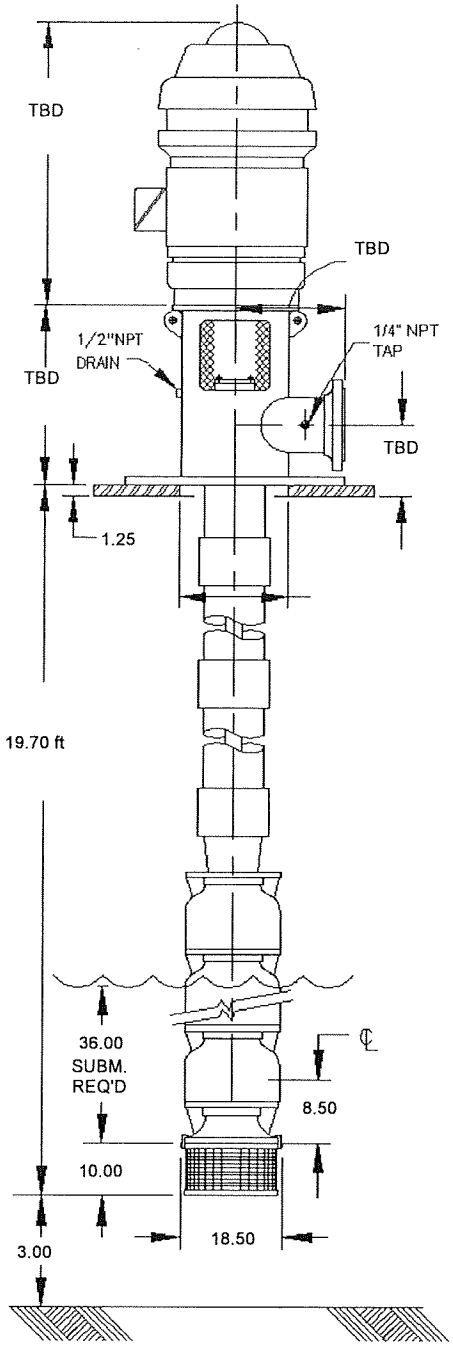

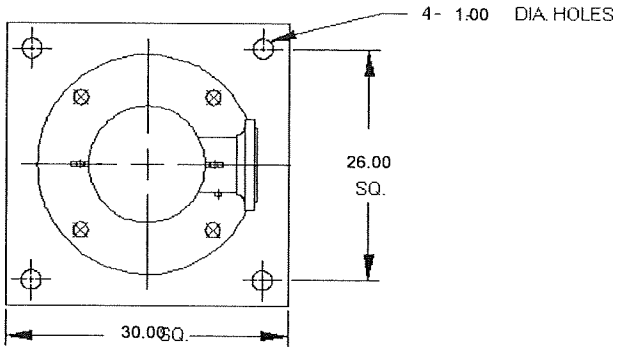

Discharge

12 in. 150#RF - ANSI Flange
19 in. Dia. Flange
12 - 1 in. Dia. holes
17 in. Bolt circle

NOTES:
ALL DIMENSIONS IN INCHES UNLESS OTHERWISE NOTED.
DRAWING NOT TO SCALE.
NOT TO BE USED FOR CONSTRUCTION UNLESS CERTIFIED.

REV.	BY	DATE	DESCRIPTION

Customer: Arber Associates
Customer Reference:
Item Number: 003
Curve Number: 16DKL 1770
Date: 18 May 2009

OUTLINE DRAWING

DRAWING

Pump Performance Datasheet

Customer	: Arber Associates	Quote number	: 81820
Customer reference	:	Pump size	: 14JKM
Item number	: 004	Stages	: 3
Service	: Finished Water	Based on curve number	: 14JKM 1770 Rev. 0
Quantity of pumps	: 1	Date last saved	: 19 May 2009 8:40 AM

Operating Conditions

Flow, rated	: 1,900.0 USgpm
Head, rated (requested)	: 210.0 ft
Head, rated (actual)	: 211.7 ft
Suction pressure, rated / max	: 0.00 / 0.00 psi.g
NPSH available, rated	: Ample
Frequency	: 60 Hz

Performance

Pump speed, rated	: 1,770 rpm
Impeller diameter, rated	: 9.59 in
Impeller diameter, maximum	: 10.55 in
Impeller diameter, minimum	: 9.00 in
Efficiency (bowl / pump)	: 82.93 / 81.65 %
NPSH required / margin required	: 16.59 / 0.00 ft
Ns (imp. eye flow) / Nss (imp. eye flow)	: 2,440 / 9,675 US Units
MCSF	: 451.1 USgpm
Head, maximum, rated diameter	: 317.9 ft
Head rise to shutoff	: 51.40 %
Flow, best eff. point (BEP)	: 1,634.7 USgpm
Flow ratio (rated / BEP)	: 116.23 %
Diameter ratio (rated / max)	: 90.93 %
Head ratio (rated dia / max dia)	: 76.44 %
Cq/Ch/Ce [ANSI/HI 9.6.7-2004]	: 1.00 / 1.00 / 1.00
Selection status	: Acceptable

Liquid

Liquid type	: Water - Clean
Additional liquid description	:
Solids diameter, max	: 0.00 in
Temperature, max	: 68.00 deg F
Fluid density, rated / max	: 0.998 / 0.998 SG
Viscosity, rated	: 1.00 cP
-	:

Material

Material requested	: Auto
Material selected	: Cast Iron/Bronze

Pressure Data

Maximum working pressure	: 137.6 psi.g
Maximum allowable working pressure	: 374.0 psi.g
Maximum allowable suction pressure	: N/A
Hydrostatic test pressure	: N/A

Driver & Power Data

Driver sizing specification	: Maximum power
Margin over specification	: 0.00 %
Service factor	: 1.15
Power, hydraulic	: 101 hp
Power (bowl / pump)	: 121 / 122 hp
Power, maximum, rated diameter	: 122 hp
Minimum recommended motor rating	: 125 hp / 93.21 kW

Bowl performance. Corrected for construction and viscosity.

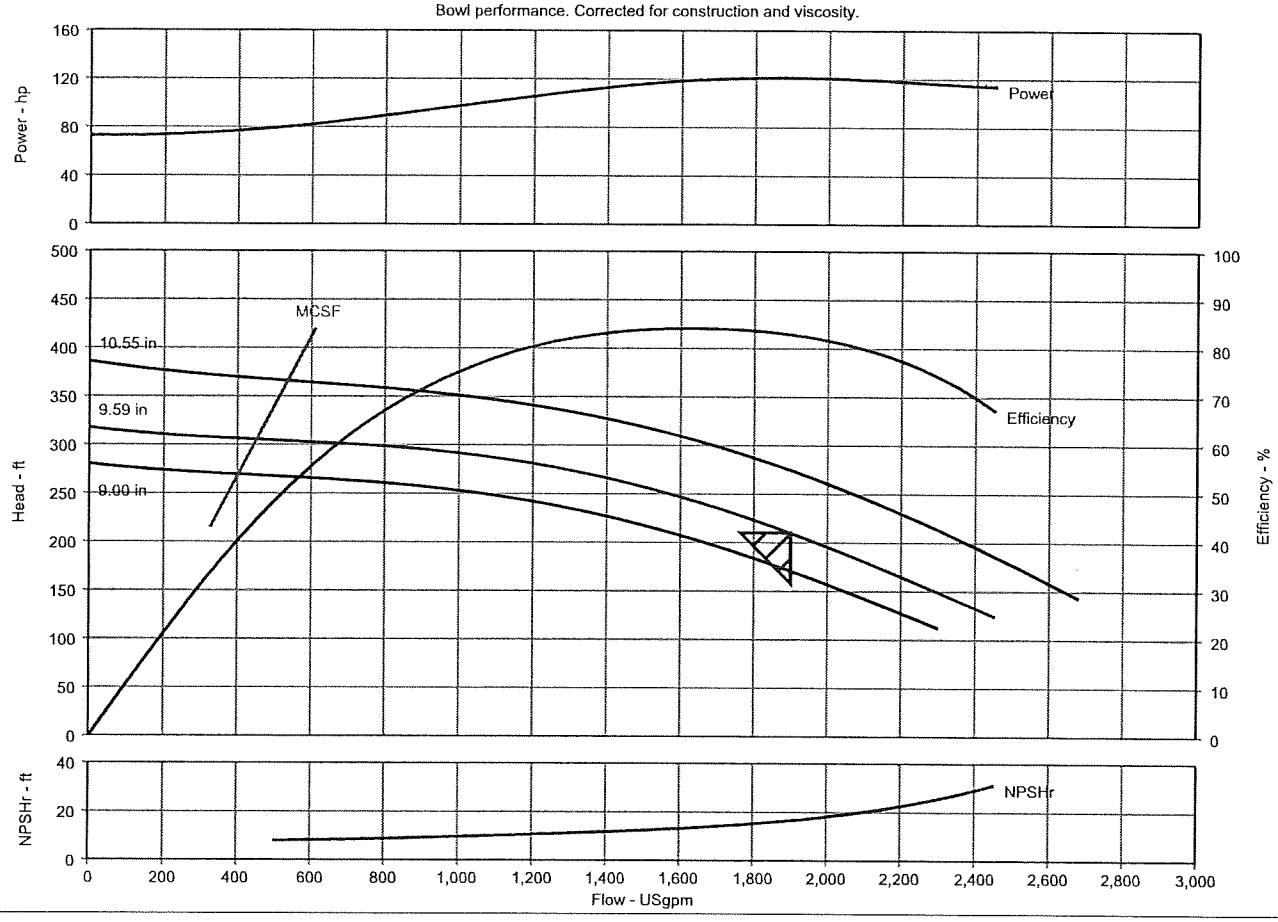

VERTICAL TURBINE PUMP

1,900.0 USgpm 210.0 ft TDH
3 STAGE TYPE 14JKM
10x16.5F DISCHARGE HEAD

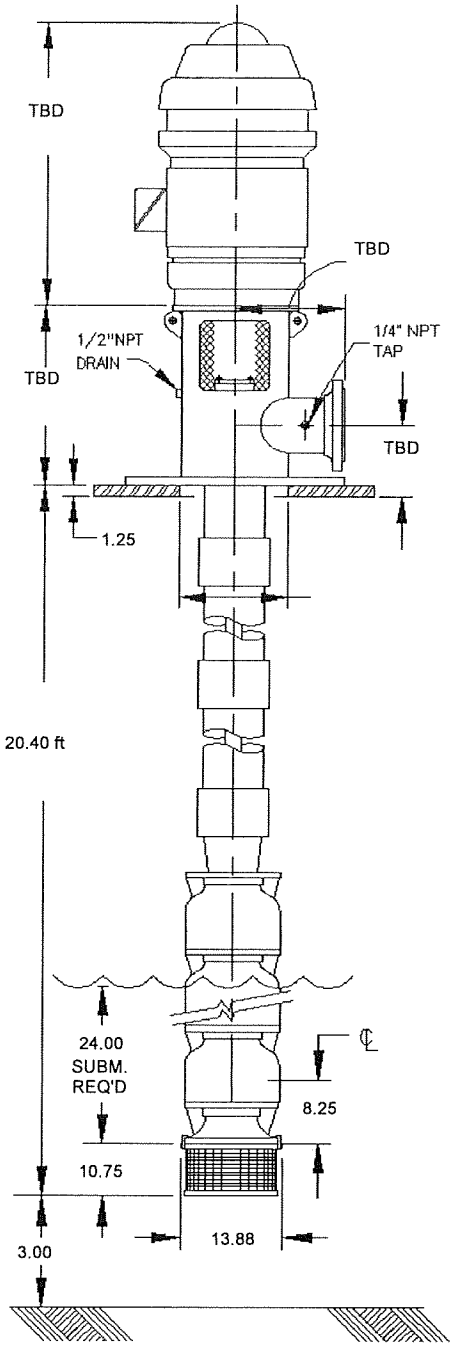

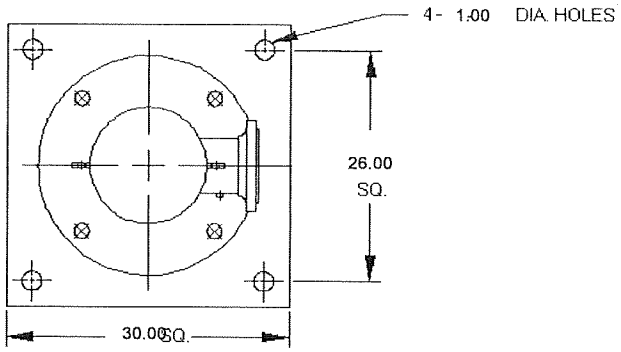

Discharge

10 in. 150#RF - ANSI Flange
16 in. Dia. Flange
12 - 1 in. Dia. holes
14.25 in. Bolt circle

NOTES:
ALL DIMENSIONS IN INCHES UNLESS OTHERWISE NOTED.
DRAWING NOT TO SCALE.
NOT TO BE USED FOR CONSTRUCTION UNLESS CERTIFIED.

REV.	BY	DATE	DESCRIPTION

Customer: Arber Associates
Customer Reference:
Item Number: 004
Curve Number: 14JKM 1770
Date: 19 May 2009

OUTLINE DRAWING

DRAWING

Pump Performance Datasheet

Customer	: Arber Associates	Quote number	: 81820
Customer reference	:	Pump size	: 11JKM
Item number	: 005	Stages	: 3
Service	: Microfiltration Feed Pumps	Based on curve number	: 11JKM 1770 Rev. 0
Quantity of pumps	: 3	Date last saved	: 18 May 2009 4:55 PM

Operating Conditions

Flow, rated	: 700.0 USgpm
Head, rated (requested)	: 180.0 ft
Head, rated (actual)	: 181.1 ft
Suction pressure, rated / max	: 0.00 / 0.00 psi.g
NPSH available, rated	: Ample
Frequency	: 60 Hz

Performance

Pump speed, rated	: 1,770 rpm
Impeller diameter, rated	: 8.16 in
Impeller diameter, maximum	: 8.31 in
Impeller diameter, minimum	: 7.20 in
Efficiency (bowl / pump)	: 83.15 / 82.08 %
NPSH required / margin required	: 8.95 / 0.00 ft
Ns (imp. eye flow) / Nss (imp. eye flow)	: 2,338 / 8,590 US Units
MCSF	: 240.5 USgpm
Head, maximum, rated diameter	: 223.0 ft
Head rise to shutoff	: 23.88 %
Flow, best eff. point (BEP)	: 775.9 USgpm
Flow ratio (rated / BEP)	: 90.22 %
Diameter ratio (rated / max)	: 98.17 %
Head ratio (rated dia / max dia)	: 94.09 %
Cq/Ch/Ce [ANSI/HI 9.6.7-2004]	: 1.00 / 1.00 / 1.00
Selection status	: Acceptable

Liquid

Liquid type	: Water - Clean
Additional liquid description	:
Solids diameter, max	: 0.00 in
Temperature, max	: 68.00 deg F
Fluid density, rated / max	: 0.998 / 0.998 SG
Viscosity, rated	: 1.00 cP
-	:

Material

Material requested	: Auto
Material selected	: Cast Iron/Bronze

Pressure Data

Maximum working pressure	: 96.51 psi.g
Maximum allowable working pressure	: 361.0 psi.g
Maximum allowable suction pressure	: N/A
Hydrostatic test pressure	: N/A

Driver & Power Data

Driver sizing specification	: Maximum power
Margin over specification	: 0.00 %
Service factor	: 1.15
Power, hydraulic	: 31.76 hp
Power (bowl / pump)	: 38.20 / 38.52 hp
Power, maximum, rated diameter	: 40.55 hp
Minimum recommended motor rating	: 50.00 hp / 37.29 kW

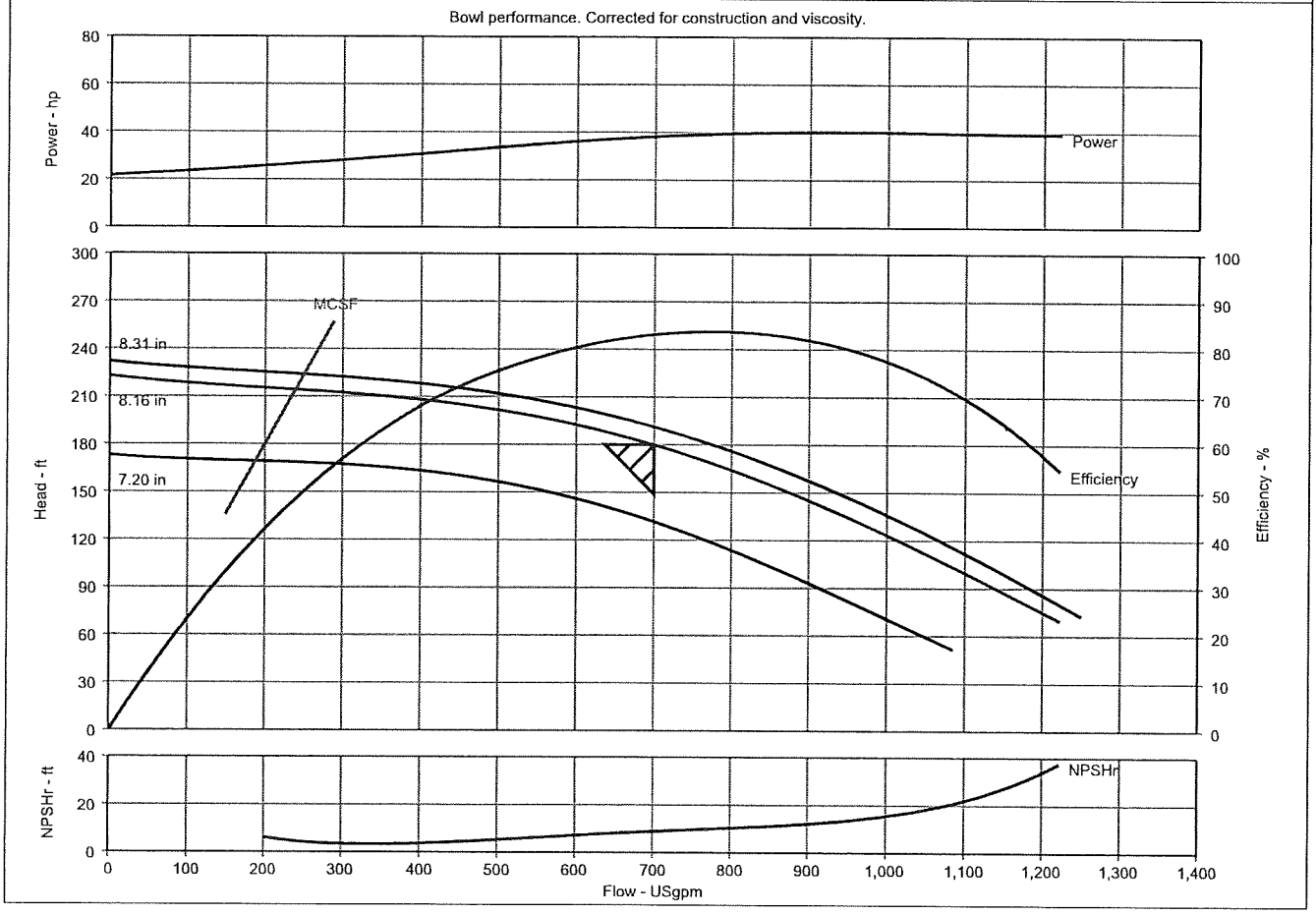

VERTICAL TURBINE PUMP

700.0 USgpm 180.0 ft TDH
3 STAGE TYPE 11JKM
8x12F DISCHARGE HEAD

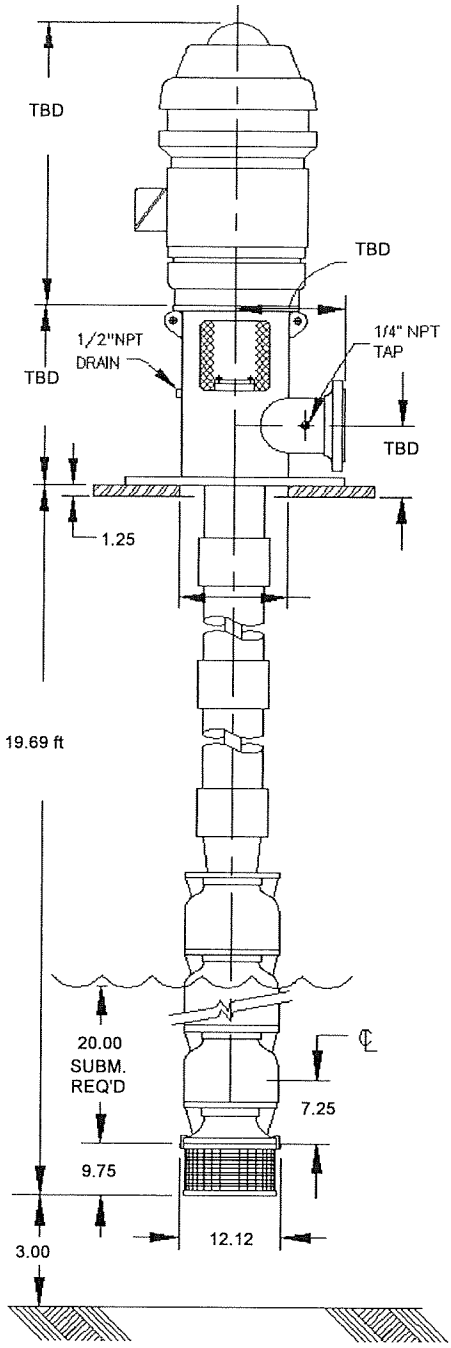

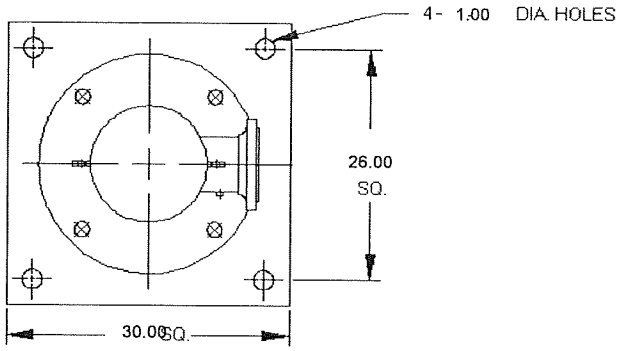

Discharge

8 in. 150#RF - ANSI Flange
13.5 in. Dia. Flange
8 - .88 in. Dia. holes
11.75 in. Bolt circle

NOTES:
ALL DIMENSIONS IN INCHES UNLESS OTHERWISE NOTED.
DRAWING NOT TO SCALE.
NOT TO BE USED FOR CONSTRUCTION UNLESS CERTIFIED.

REV.	BY	DATE	DESCRIPTION

Customer: Arber Associates
Customer Reference:
Item Number: 005
Curve Number: 11JKM 1770
Date: 18 May 2009

OUTLINE DRAWING

DRAWING

Appendix J

Preliminary Effluent Limits

STATE OF COLORADO

Bill Ritter, Jr., Governor
James B. Martin, Executive Director

Dedicated to protecting and improving the health and environment of the people of Colorado

4300 Cherry Creek Dr. S.
Denver, Colorado 80246-1530
Phone (303) 692-2000
TDD Line (303) 691-7700
Located in Glendale, Colorado

http://www.cdphe.state.co.us

Laboratory Services Division
8100 Lowry Blvd.
Denver, Colorado 80230-6928
(303) 692-3090

Colorado Department
of Public Health
and Environment

February 27, 2009

Joseph D. Kiolbasa
City of Sterling
421 N. 4th Street, P.O. Box 4000
Sterling, CO 80751

Re: PEL-23008, City of Sterling Proposed Water Treatment Plant

Dear Mr. Kiolbasa:

The Water Quality Control Division (Division) of the Colorado Department of Public Health and Environment has prepared, per your request, the Preliminary Effluent Limits (PELs) for the City of Sterling's proposed water treatment plant (WTP). These effluent limits were developed, as detailed in the attached document, for use as one of the submittals in a future application for a permit.

PELs developed for the WTP (Table 1) are based on effluent limits for pollutants of concern as established in the *Regulations for Effluent Limitations* (Regulation No. 62), and water quality-based effluent limits (see the analysis in the attached document) necessary for protection of the water quality in the receiving water. With a proposed average daily discharge rate of 0.48 million gallons per day (MGD) and discharge into the South Platte River, which is identified as stream segment COSPLS01, the City of Sterling proposed WTP will require an individual permit.

A PELs evaluation is attached to document the findings and decisions that were used to derive the PELs in Table 1.

Table 1 Proposed City of Sterling WTP Preliminary Effluent Limits for Discharge to the South Platte River	
TSS, mechanical plant (mg/l)	45 (7-day average), 30 (30-day average)
Oil and Grease (mg/l)	10 (maximum)
Other Pollutants	***Max. Limits or WQBELs***
DO (mg/l)	5 (minimum)
pH (s.u.)	6.5-9.0 (minimum-maximum)
E. coli (#/100 ml)	4000 (7-day geomean), 2000 (30-day geomean)
TRC (mg/l)	0.48 (daily maximum), 0.59 (30-day average)
Nitrate (mg/l)	129 (daily maximum)
Nitrite (mg/l)	12 (daily maximum)
Metals and Cyanide	***WQBELs***
As, TR (µg/l)	50 (daily maximum)
Cd, Dis (µg/l)	481 (daily maximum), 333 (30-day average)
Cr+3, TR (µg/l)	1266 (daily maximum)
Cr+6, Dis (µg/l)	387 (daily maximum), 551 (30-day average)
Cu, Dis (µg/l)	1108 (daily maximum), 1215 (30-day average)
CN, Free (µg/l)	127 (daily maximum)
Fe, Dis (µg/l)	NA (daily maximum), 15531 (30-day average)
Fe, TR (µg/l)	NA (daily maximum), 53703 (30-day average)
Pb, Dis (µg/l)	7116 (daily maximum), 591 (30-day average)
Mn, Dis (µg/l)	118965 (daily maximum), 472 (30-day average)
Hg, Tot (µg/l)	NA (daily maximum), 0.54 (30-day average)
Ni, Dis (µg/l)	38187 (daily maximum), 8743 (30-day average)
Se, Dis (µg/l)	337 (daily maximum), 4.6 (30-day average)
Ag, Dis (µg/l)	557 (daily maximum), 188 (30-day average)
U, Dis (µg/l)	279124 (daily maximum), 368719 (30-day average)
Zn, Dis (µg/l)	9330 (daily maximum), 19935 (30-day average)
B, Tot (mg/l)	NA (daily maximum), 40 (30-day average)
Chloride (mg/l)	NA (daily maximum), 8893 (30-day average)
Sulfate (mg/l)	NA (daily maximum), 250 (30-day average)
Sulfide (mg/l)	NA (daily maximum), 0.11 (30-day average)
Calcium (mg/l)	Report (30-day average)
Magnesium (mg/l)	Report (30-day average)
Sodium (mg/l)	NA (daily maximum), 160 (30-day average)
Bromodichloromethane (µg/l)	NA (daily maximum), 30 (30-day average)
Bromoform (µg/l)	NA (daily maximum), 231 (30-day average)
Chlorodibromomethane (µg/l)	NA (daily maximum), 2900 (30-day average)
Chloroform (µg/l)	NA (daily maximum), 183 (30-day average)

If you have any questions regarding this matter, please contact me at (303) 692-3524.

Sincerely,

Gary Beers
Water Quality Control Division
Industrial Permits Unit

cc: Dennis Pontius, WQCD – Engineering Section
File: PEL 230008

APPENDIX A
PRELIMINARY EFFLUENT LIMITATIONS
the South Platte River
City of Sterling Proposed WTP

Table of Contents

Contents

I. PRELIMINARY EFFLUENT LIMITATIONS SUMMARY 2
II. INTRODUCTION 3
III. WATER QUALITY STANDARDS 5
Narrative Standards 5
Basic Standards for Organic Parameters and Radionuclide's 5
Temperature 7
Segment Specific Numeric Standard 7
Table Value Standards and Hardness Calculations 9
Regulation 93 – 303(d) List and Total Maximum Daily Loads 10
Regulation 94 – 305(b) Monitoring and Evaluation List 10
IV. RECEIVING STREAM INFORMATION 11
Low Flow Analysis 11
Mixing Zones 12
Ambient Water Quality 12
V. FACILITY INFORMATION AND POLLUTANTS EVALUATED 14
Facility Information 14
Pollutants of Concern 14
VI. DETERMINATION OF WATER QUALITY BASED EFFLUENT LIMITATIONS (WQBELS) 15
Technical Information 15
Calculation of WQBELs 16
Agricultural Use Parameters (SAR, Na and EC): 21
VII. ANTIDEGRADATION EVALUATION 23
VIII. REGULATORY ANALYSIS 24
IX. PRELIMINARY EFFLUENT LIMITS 24
X. REFERENCES 26

I. Preliminary Effluent Limitations Summary

Table A-1 includes summary information related to this PEL. This summary table includes key regulatory starting points used in development of the PEL such as: receiving stream information; threatened and endangered species; 303(d) and 305(b) listings; low flow and facility flow summaries; and a list of parameters evaluated.

Table A-1
PEL Summary

Facility Information			
Facility Name	**Permit Number**	**Design Flow (max 30-day avg, MGD)**	**Design Flow (max 30-day avg, CFS)**
City of Sterling Proposed WTP	PEL-230008	0.48	0.74

Receiving Stream Information			
Receiving Stream Name	**Segment ID**	**Designation**	**Classification(s)**
South Platte River	COSPLS01	Use Protected	Warm Water Aquatic Life Class 2, Recreation Class 1a Existing Primary Contact, Water Supply, Agriculture

Low Flows (cfs)			
1E3 (1-day)	**7E3 (7-day)**	**30E3 (30-day)**	**Ratio of 30E3 to the Design Flow (cfs)**
18	39	39	53:1

Regulatory Information					
T&E Species	**303(d) (Reg 93)**	**TMDL Status**	**305(b) (Reg 94)**	**Temporary Modification(s)**	**Control Regulation**
No	None	None	Aquatic Life Use	NH3(ac/ch)=TVS (old) (Type i) Expires 12/31/2011	None

Pollutants Evaluated
List pollutants evaluated: total residual chlorine, common trihalomethanes (chloroform, chlorodibromomethane, dichlorobromomethane, and bromoform), pH, total dissolved solids (TDS), total suspended solids (TSS), radionuclides, and the following inorganics in source water that will be concentrated in the brine waste resulting from nanofiltration: antimony, aluminum, arsenic, barium, beryllium, boron, chloride, fluoride, iron, lead, lithium, cadmium, chromium, cobalt, copper, manganese, mercury, molybdenum, nickel, selenium, silver, sulfate, thallium, vanadium, zinc, and uranium.

II. Introduction

The preliminary effluent limitations (PEL) for the South Platte River near the City of Sterling proposed Water Treatment Plant (WTP), located in Logan County, is intended to determine the assimilative capacities available for pollutants found to be of concern. This PEL describes how the water quality

based effluent limits (WQBELs) are developed. These parameters may or may not appear in the permit with limitations or monitoring requirements, subject to other determinations such as reasonable potential analysis, evaluation of federal effluent limitation guidelines, implementation of state-based technology based limits, mixing zone analyses, 303(d) listings, threatened and endangered species listing, or other requirements as discussed in the permit rationale. Figure A-1 contains a map of the study area evaluated as part of this PEL.

FIGURE A-1

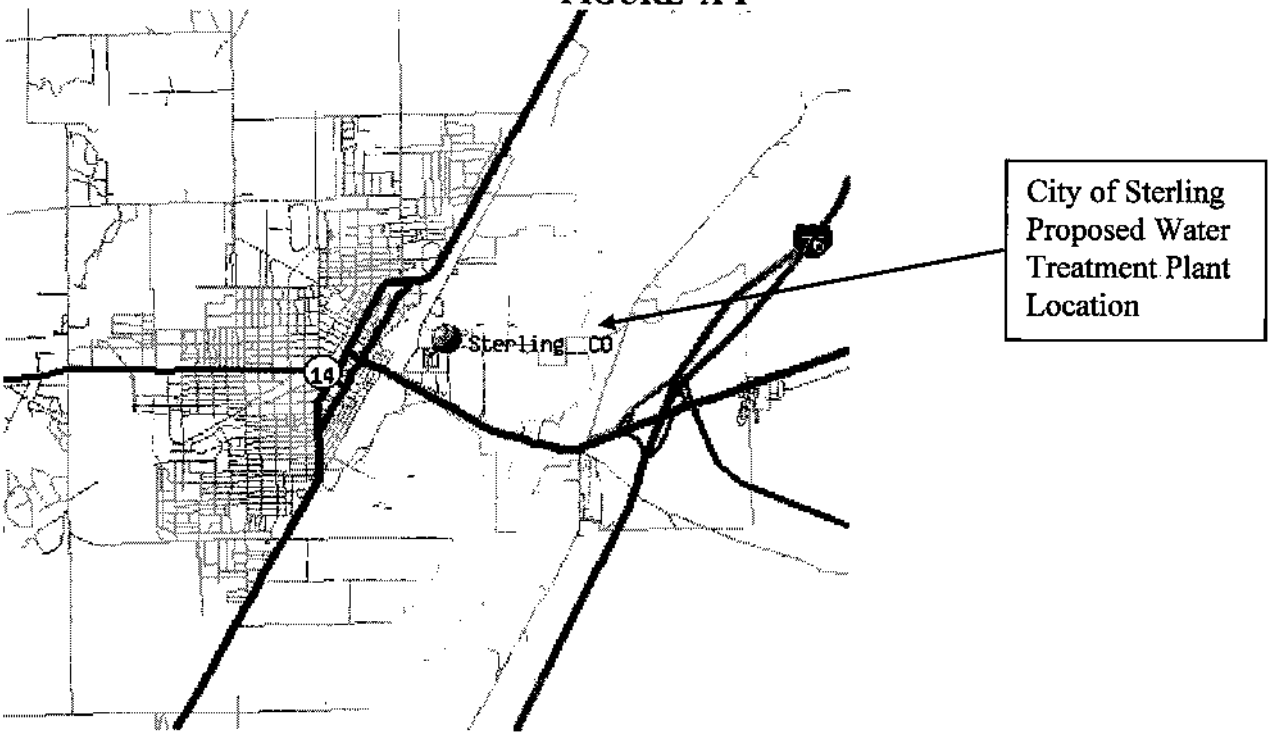

The City of Sterling proposed WTP will discharge to the South Platte River, which is in the Water Body Identification (WBID) stream segment COSPLS01. This means the South Platte River Basin, Lower South Platte River Sub-basin, Stream Segment 01. This segment is composed of the "Mainstem of the South Platte River from the Weld/Morgan County Line to the Colorado/Nebraska border." Stream segment COSPLS01 is classified for Warm Water Aquatic Life Class 2, Class 1a Existing Primary Contact Recreation, Agriculture and Water Supply.

Information used in this assessment includes data gathered from the City of Sterling proposed WTP, the Division, the Colorado Division of Water Resources (DWR), Riverwatch, the U.S. Environmental Protection Agency (EPA), and the U.S. Geological Survey (USGS). The data used in the assessment consist of the best information available at the time of preparation of this PELs analysis.

III. Water Quality Standards

Narrative Standards

Narrative Statewide Basic Standards have been developed in Section 31.11(1) of the regulations, and apply to any pollutant of concern, even where there is no numeric standard for that pollutant. Waters of the state shall be free from substances attributable to human-caused point source or nonpoint source discharges in amounts, concentrations or combinations which:

for all surface waters except wetlands;

(i) can settle to form bottom deposits detrimental to the beneficial uses. Depositions are stream bottom buildup of materials which include but are not limited to anaerobic sludges, mine slurry or tailings, silt, or mud; or
(ii) form floating debris, scum, or other surface materials sufficient to harm existing beneficial uses; or
(iii) produce color, odor, or other conditions in such a degree as to create a nuisance or harm existing beneficial uses or impart any undesirable taste to significant edible aquatic species or to the water; or
(iv) are harmful to the beneficial uses or toxic to humans, animals, plants, or aquatic life; or
(v) produce a predominance of undesirable aquatic life; or
(vi) cause a film on the surface or produce a deposit on shorelines; and

for surface waters in wetlands;

(i) produce color, odor, changes in pH, or other conditions in such a degree as to create a nuisance or harm water quality dependent functions or impart any undesirable taste to significant edible aquatic species of the wetland; or
(ii) are toxic to humans, animals, plants, or aquatic life of the wetland.

In order to protect the Basic Standards in waters of the State, effluent limitations and/or monitoring requirements for any parameter of concern could be put in CDPS discharge permits.

Basic Standards for Organic Parameters and Radionuclide's

Radionuclide's: Statewide Basic Standards have been developed in Section 31.11(2) and (3) of *The Basic Standards and Methodologies for Surface Water* to protect the waters of the State from radionuclide's and organic chemicals.

In no case shall radioactive materials in surface waters be increased by any cause attributable to municipal, industrial, or agricultural practices or discharges to as to exceed the following levels, unless alternative site-specific standards have been adopted. Standards for radionuclides are shown in Table A-2.

Table A-2 Radionuclide Standards	
Parameter	**Picocuries per Liter**
Americium 241*	0.15
Cesium 134	80
Plutonium 239, and 240*	0.15
Radium 226 and 228*	5
Strontium 90*	8
Thorium 230 and 232*	60
Tritium	20,000

*Radionuclide samples for these materials should be analyzed using unfiltered (total) samples. These Human Health based standards are 30-day average values for both plutonium and americium.

Organics: The organic pollutant standards contained in the *Basic Standards for Organic Chemicals* Table are applicable to all surface waters of the state for the corresponding use classifications, unless alternative site-specific standards have been adopted. These standards have been adopted as "interim standards" and will remain in effect until alternative permanent standards are adopted by the Commission. These interim standards shall not be considered final or permanent standards subject to antibacksliding or downgrading restrictions. Although not reproduced in this PEL, the specific standards for organic chemicals can be found in Regulation 31.11(3).

The aquatic life standards apply to all stream segments that are classified for aquatic life. The water supply standards apply only to those segments that are classified for water supply. The water + fish standards apply to those segments that have a Class 1 aquatic life and a water supply classification. The fish ingestion standards apply to Class 1 aquatic life segments that do not have a water supply designation. The water + fish and the fish ingestion standards may also apply to Class 2 aquatic life segments, where fish of a catchable size and which are normally consumed are present, and where fishing occurs on a regular basis.

Because the the South Platte River is classified for Class 2 aquatic life, with a water supply designation, the WQCC has decided water supply and aquatic life standards apply to this discharge.

Salinity

The Division's policy, Implementing Narrative Standards in Discharge Permits for the Protection of Irrigated Crops, may be applied to discharges where an agricultural water intake exists downstream of a discharge point. Limitations for electrical conductivity, sodium absorption ratio, or sodium, may be applied in accordance with this policy.

Temperature

Temperature shall maintain a normal pattern of diurnal and seasonal fluctuations with no abrupt changes and shall have no increase in temperature of a magnitude, rate, and duration deemed deleterious to the resident aquatic life. This standard shall not be interpreted or applied in a manner inconsistent with section 25-8-104, C.R.S. Effective until December 31, 2011.

Segment Specific Numeric Standards

Numeric standards are developed on a basin-specific basis and are adopted for particular stream segments by the Water Quality Control Commission. To simplify the listing of the segment-specific standards, many of the aquatic life standards are contained in a table at the beginning of each chapter of the regulations. The standards in Table A-3 have been assigned to stream segment COSPLS01 in accordance with Regulation No. 38, *Classifications and Numeric Standards for South Platte River Basin, Laramie River Basin, Republican River Basin, Smoky Hill River Basin.*

Table A-3 **In-stream Standards for Stream Segment COSPLS01**
Physical and Biological
Dissolved Oxygen (DO) = 5 mg/l, minimum
pH = 6.5 - 9 su
Fecal Coliform chronic = 200 colonies/100 ml
E. coli chronic = 126 colonies/100 ml
Inorganic
Total Ammonia acute and chronic = TVS
Chlorine acute = 0.019 mg/l
Chlorine chronic = 0.011 mg/l
Free Cyanide acute = 0.005 mg/l
Sulfide chronic = 0.002 mg/l
Boron chronic = 0.75 mg/l
Nitrite acute = 0.5 mg/l
Nitrate acute = 10 mg/l
Chloride chronic = 250 mg/l
Sulfate chronic = 670 mg/L (Ambient water quality as of January 1, 2000)
Metals and Cyanide
Total Recoverable Arsenic acute = 50 µg/L
Dissolved Cadmium acute and chronic = TVS
Total Recoverable Trivalent Chromium acute = 50 µg/l
Dissolved Hexavalent Chromium acute and chronic = TVS
Dissolved Copper acute and chronic = TVS
Dissolved Iron chronic = 300 µg/l
Total Recoverable Iron chronic = 1000 µg/l
Dissolved Lead acute and chronic = TVS
Dissolved Manganese chronic = 50 µg/l
Dissolved Manganese acute and chronic = TVS
Total Mercury chronic = 0.01 µg/l
Dissolved Nickel acute and chronic = TVS
Dissolved Selenium acute and chronic = TVS
Dissolved Silver acute and chronic = TVS
Dissolved Zinc acute and chronic = TVS

Note that the sulfate, dissolved iron, and chronic dissolved manganese standards are specified as WS, which stands for water supply. The regulations intend for standards to be established for these pollutants at the greater of the existing quality as of January 1, 2000, or values of 250 mg/l, 300 ug/l and 50 ug/l, respectively, for sulfate, dissolved iron and chronic dissolved manganese. For sulfate, the existing quality as of January 1, 2000 was 670 mg/l and therefore this value is used as the standard; for dissolved iron and chronic dissolved manganese, the 300 mg/l and 50 ug/l respective concentrations were greater than the existing quality, and therefore are used as the standards.

Table Value Standards and Hardness Calculations

Standards for metals are generally shown in the regulations as Table Value Standards (TVS), and these often must be derived from equations that depend on the receiving stream hardness or species of fish present; for ammonia, standards are discussed further in Section IV of this PEL. The Classification and Numeric Standards documents for each basin include a specification for appropriate hardness values to be used. Specifically, the regulations state that:

> The hardness values used in calculating the appropriate metal standard should be based on the lower 95% confidence limit of the mean hardness value at the periodic low flow criteria as determined from a regression analysis of site-specific data. Where insufficient site-specific data exists to define the mean hardness value at the periodic low flow criteria, representative regional data shall be used to perform the regression analysis. Where a regression analysis is not appropriate, a site-specific method should be used.

The mean hardness of the South Platte River was computed to be 904 mg/l based on sampling data from Riverwatch sampling location 188, which is approximately 45 miles upstream of the City of Sterling proposed WTP. The *Basic Standards and Methodologies for Surface Water* indicates that hardness must be capped at 400 mg/l when determining in-stream metal water quality standards using the equations in the TVS. This maximum hardness value and the formulas contained in the TVS were used to calculate the in-stream water quality standards for metals, with the results shown in Table A-4.

Table A-4

TVS-Based Metals Water Quality Standards for PEL-xxxxxx

Based on the Table Value Standards Contained in the Colorado Department of Public Health and Environment Water Quality Control Commission *Regulation 38*

Parameter	***In-Stream Water Quality Standard***		***TVS Formula: Hardness (mg/l) as CaCO3 =*** **400**
Cadmium, Dissolved	Acute	19 µg/l	$[1.13667-0.04184\ln(\text{hardness})][e^{(1.128(\ln(\text{hardness}))-3.6867)}]$
	Chronic	6.2 µg/l	$[1.10167-0.04184\ln(\text{hardness})][e^{(0.7852(\ln(\text{hardness}))-2.715)}]$
Hexavalent Chromium, Dissolved	Acute	16 µg/l	Numeric standards provided, formula not applicable
	Chronic	11 µg/l	Numeric standards provided, formula not applicable
Copper, Dissolved	Acute	50 µg/l	$e^{(0.9422(\ln(\text{hardness}))-1.7408)}$
	Chronic	29 µg/l	$e^{(0.8545(\ln(\text{hardness}))-1.7428)}$
Lead, Dissolved	Acute	281 µg/l	$[1.46203-0.145712\ln(\text{hardness})][e^{(1.273(\ln(\text{hardness}))-1.46)}]$
	Chronic	11 µg/l	$[1.46203-0.145712\ln(\text{hardness})][e^{(1.273(\ln(\text{hardness}))-4.705)}]$
Manganese, Dissolved	Acute	4738 µg/l	$e^{(0.3331(\ln(\text{hardness}))+6.4676)}$
	Chronic	2618 µg/l	$e^{(0.3331(\ln(\text{hardness}))+5.8743)}$
Nickel, Dissolved	Acute	1513 µg/l	$e^{(0.846(\ln(\text{hardness}))+2.253)}$
	Chronic	168 µg/l	$e^{(0.846(\ln(\text{hardness}))+0.0554)}$
Selenium, Dissolved	Acute	18.4 µg/l	Numeric standards provided, formula not applicable
	Chronic	4.6 µg/l	Numeric standards provided, formula not applicable
Silver, Dissolved	Acute	22 µg/l	$\frac{1}{2} e^{(1.72(\ln(\text{hardness}))-6.52)}$
	Chronic	3.5 µg/l	$e^{(1.72(\ln(\text{hardness}))-9.06)}$
Zinc, Dissolved	Acute	379 µg/l	$e^{(0.8473(\ln(\text{hardness}))+0.8618)}$
	Chronic	382 µg/l	$e^{(0.8473(\ln(\text{hardness}))+0.8699)}$

Regulation 93 – 303(d) List and Total Maximum Daily Loads

This stream segment is not listed on the Division's 303(d) list of water quality impacted streams.

Regulation 94 – 305(b) Monitoring and Evaluation List

This stream segment is on the Division's 305(b) list for monitoring and evaluation for aquatic life use. According to Division standard procedure, the Division's Environmental Data Unit investigates issues of water quality standard exceedances. For a receiving water placed on this list, the Restoration and Protection Unit is tasked with examining whether or not this segment should be elevated to the 303(d) List of Impaired Waters.

IV. Receiving Stream Information

Low Flow Analysis

The Colorado Regulations specify the use of low flow conditions when establishing water quality based effluent limitations, specifically the acute and chronic low flows. The acute low flow, referred to as 1E3, represents the one-day low flow recurring in a three-year interval, and is used in developing limitations based on an acute standard. The 7-day average low flow, 7E3, represents the seven-day average low flow recurring in a 3 year interval, and is used in developing limitations based on a Maximum Weekly Average Temperature standard (MWAT). The chronic low flow, 30E3, represents the 30-day average low flow recurring in a three-year interval, and is used in developing limitations based on a chronic standard.

Calculations of low flows in the South Platte River above the proposed Sterling WTP discharge are difficult because of limited data. There is a USGS gage approximately 35 miles upstream (USGS gage 06759910), and a USGS gage approximately 55 miles downstream (USGS gage 06764000).

Due to the numerous water diversions and hydromodifications in this region and segment of the South Platte River, it is necessary to utilize a flow model created by the Northern Colorado Water Conservation District (NCWCD) to determine critical low flows. This flow model is for estimating flows in the South Platte River from Kersey, CO to the Colorado/Nebraska state line.

The original use of this model, "Point Flow Analysis" was to provide the NCWCD with flow information that could be used in allocating water. Personnel from the Colorado Water Quality Control Division have examined this modeling tool and have found it to be the best tool for estimating surface flows in the South Platte River between Kersey, CO and the Colorado/Nebraska state line. Ten years of USGS gage records, diversion, and addition records were used in the NCWCD model to generate a synthetic flow record for a point just upstream of the Bravo Ditch (State ID # 521). This period of record is from 1984-1994. This synthetic flow record was used in the USEPA DFLOW low flow analysis software to compute the annual and monthly 1E3 and 30E3 low flows. In the permit building tool, the 30E3 low flows were used as an approximation of the 7E3 low flows, included in Table A-5.

For this analysis, low flows are summarized in Table A-5.

Table A-5

Low Flows for the South Platte River at the City of Sterling Proposed WTP

Low Flow (cfs)	*Annual*	*Jan*	*Feb*	*Mar*	*Apr*	*May*	*Jun*	*Jul*	*Aug*	*Sep*	*Oct*	*Nov*	*Dec*
1E3 Acute	18	59	129	41	18	21	20	22	27	24	24	39	18
7E3 Chronic	39	59	129	41	40	40	43	50	53	39	39	39	54
30E3 Chronic	39	59	129	41	40	40	43	50	53	39	39	39	54

The ratio of the low flow of the South Platte River to the City of Sterling proposed WTP design flow is 53:1.

Mixing Zones

The amount of the available assimilative capacity (dilution) that may be used by the permittee for the purposes of calculating the WQBELs may be limited in a permitting action based upon a mixing zone analysis or other factor. These other factors that may reduce the amount of assimilative capacity available in a permit are: presence of other dischargers in the vicinity; the presence of a water diversion downstream of the discharge (in the mixing zone); the need to provide a zone of passage for aquatic life; the likelihood of bioaccumulation of toxins in fish or wildlife; habitat considerations such as fish spawning or nursery areas; the presence of threatened and endangered species; potential for human exposure through drinking water or recreation; the possibility that aquatic life will be attracted to the effluent plume; the potential for adverse effects on groundwater; and the toxicity or persistence of the substance discharged.

Unless a facility has performed a mixing zone study during the course of the previous permit, and a decision has been made regarding the amount of the assimilative capacity that can be used by the facility, the Division assumes that the full assimilative capacity can be allocated. Note that the review of mixing study considerations, exemptions and perhaps performing a new mixing study (due to changes in low flow, change in facility design flow, channel geomorphology or other reason) is evaluated in every permit and permit renewal.

If a mixing zone study has been performed and a decision regarding the amount of available assimilative capacity has been made, the Division may calculate the water quality based effluent limitations (WQBELs) based on this available capacity. In addition, the amount of assimilative capacity may be reduced by T&E implications.

Ambient Water Quality

The Division evaluates ambient water quality based on a variety of statistical methods as prescribed in Section 31.8(2)(a)(i) and 31.8(2)(b)(i)(B) of the *Colorado Department of Public Health and Environment Water Quality Control Commission Regulation No. 31*, and as outlined in the Division's Policy for Characterizing Ambient Water Quality for Use in Determining Water Quality Standards Based Effluent Limits (WQP-19). Ambient water quality is evaluated in this PEL analysis for use in determining assimilative capacities and in completing antidegradation reviews for pollutants of concern, where applicable.

To conduct an assessment of the ambient water quality upstream of the City of Sterling proposed WTP, data were gathered from USGS Station 06759910 located approximately 25 miles upstream from the facility. Data were available for a period of record from April 1993 through August 2001. A summary of the upstream data from this source is presented in Table A-6.

Table A-6

Ambient Water Quality for the South Platte River

Parameter	*Number of Samples*	*15th Percentile*	*50th Percentile*	*85th Percentile*	*Mean*	*Maximum*	*Chronic Stream Standard*	*Notes*
Temp (°C)	40	3.9	15	23	14	0	NA	
DO (mg/l)	39	8	9.9	12	9.9	15	5	
pH (su)	40	8.1	8.3	8.4	8.3	8.8	6.5-9	
E. coli (#/100 ml)	0	1	1	1	1	1	126	1, 2
TRC (mg/l)	0	0	0	0	0	0	0.011	2
Nitrate (mg/l)	37	2.7	4.2	5.1	4	6.4	10	
Nitrite (mg/l)	39	0.02	0.03	0.04	0.031	0.12	0.5	
As, TR (µg/l)	0	0	0	0	0	0	100	4
Cd, Dis (µg/l)	6	0	0	0	0	0	6.20	2
Cr+6, Dis (µg/l)	6	0	0	0.75	0.5	3	11	2
Cu, Dis (µg/l)	6	3	4.5	6.5	4.8	8	29	
CN, Free (µg/l)	0	0	0	0	0	0	NA	4
Fe, Dis (µg/l)	33	0	0	11	9.6	140	300	2
Pb, Dis (µg/l)	6	0	0	0	0	0	11.00	2
Mn, Dis (µg/l)	33	6	18	42	30	170	50	
Hg, Tot (µg/l)	0	0	0	0	0	0	0.01	4
Ni, Dis (µg/l)	6	4	4	5.3	4.5	6	168	
Se, Dis (µg/l)	6	4	4	5.3	4.5	6	4.6	3
Ag, Dis (µg/l)	6	0	0	0	0	0	3.5	2
U, Dis (µg/l)	6	42	47	50	46	51	6915	
Zn, Dis (µg/l)	6	4	6	11	7.3	14	382	
B, Tot (mg/l)	0	0	0	0	0	0	0.75	4
Chloride (mg/l)	33	65	79	86	73	94	250	
Sulfate (mg/l)	33	420	560	670	538	730	250	3
Sulfide (mg/l)	0	0	0	0	0	0	0.002	4
Calcium (mg/l)	33	126	150	170	142	180	NA	
Magnesium (mg/l)	33	48	57	62	52	66	NA	
Sodium (mg/l)	33	128	150	160	138	170	78	3
SAR	33	2.4	2.6	2.7	2.5	2.9	1.5	3
EC (dS/cm)	40	1.5	1.8	1.9	1.6	2.1	NA	
Bromodichloromethane (µg/l)	0	0	0	0	0	0	0.55	4
Bromoform (µg/l)	0	0	0	0	0	0	4.3	4
Chlorodibromomethane (µg/l)	0	0	0	0	0	0	54	4
Chloroform (µg/l)	0	0	0	0	0	0	3.4	4
Hardness as $CaCO_3$ (mg/l)	0	400	400	400	400	400	NA	

Note 1: The calculated mean is the geometric mean. Note that for summarization purposes, the value of one was used where there was no detectable amount because the geometric mean cannot be calculated using a value equal to zero.

Note 2: When sample results were below detection levels, the value of zero was used in accordance with the Division's standard approach for summarization and averaging purposes.

Note 3: The ambient water quality exceeds the water quality standards for these parameters.

Note 4: No ambient water quality data available for this parameter.

V. Facility Information and Pollutants Evaluated

Facility Information

The City of Sterling proposed WTP is located approximately 1 mile east of Sterling, Colorado; at approximately latitude 40.627 North and longitude 103.180 West in Logan County. The proposed average daily discharge rate is 0.48 MGD (0.74 cfs). Potable water treatment will be performed in part using nanofiltration. The technical analyses that follow include assessments of the assimilative capacity based on this proposed rate of discharge.

An assessment of nearby facilities based on EPA's Permit Compliance System (PCS) database found 20 dischargers in the Logan County area. Several facilities conducted construction-related operations (e.g., sand and gravel) and thus had no pollutants of concern in common with the City of Sterling proposed WTP. Other facilities were located more than twenty miles from the City of Sterling proposed WTP and thus were not considered. The nearest dischargers are:

- City of Sterling WWTP (CO-0026247), which discharges to the South Platte River. The permit for this facility included a low flow analysis from the Northern Colorado Water Conservancy District (NCWCD), which was used in establishing the low flow values for this PEL.

- Sterling Ethanol, LLC (CO-0047066), which discharges to the Low Line Ditch, an unclassified water of the State.

Due to the distance between facilities, the ambient water quality background concentrations used in the mass-balance equation (as described in the following section) account for pollutants of concern contributed by upstream sources, and therefore it was not necessary to account further for upstream sources when calculating available assimilative capacities. Due to the small contributions by the facility of concern, modeling downstream facilities in conjunction with the City of Sterling WTP was not necessary.

Pollutants of Concern

Pollutants of concern may be determined by one or more of the following: facility type; effluent characteristics and chemistry; effluent water quality data; receiving water quality; presence of federal effluent limitation guidelines; or other information. Parameters evaluated in this PEL may or may not appear in a permit with limitations or monitoring requirements, subject to other determinations such as a reasonable potential analysis, mixing zone analyses, 303(d) listings, threatened and endangered species listings or other requirement as discussed in a permit rationale.

The following parameters were identified by the Division as pollutants to be evaluated for this facility:

- Total Residual Chlorine
- Disinfection byproducts - the common trihalomethanes (chloroform, chlorodibromomethane, dichlorobromomethane, and bromoform)

- pH, DO, *E. Coli*
- Radionuclides
- Naturally occurring TDS and the following inorganics in source water that will be concentrated in the brine waste resulting from nanofiltration: antimony, aluminum, arsenic, barium, beryllium, boron, chloride, fluoride, iron, lead, lithium, cadmium, chromium, cobalt, copper, manganese, mercury, molybdenum, nickel, selenium, silver, sulfate, thallium, vanadium, zinc, and uranium.
- Agricultural Use Parameters (Na, SAR, EC)

There are no site-specific in-stream water quality standards for BOD_5 or $CBOD_5$, TSS, percent removal, and oil and grease for this receiving stream. Thus, assimilative capacities were not determined for these parameters. The applicable limitations for these pollutants can be found in Regulation No. 62 and will be applied in the permit for the WTP.

According to the *Rationale for Classifications, Standards and Designations of the South Platte River*, stream segment COSPLS01 is designated a water supply to protect several public water supply wells recently identified as pumping water from the South Platte River alluvium. Thus, the nitrate standard, which is applied at the point of intake to a water supply, is further evaluated as part of this PEL.

During assessment of the facility, nearby facilities, and receiving stream water quality, no additional parameters were identified as pollutants of concern.

VI. Determination of Water Quality Based Effluent Limitations (WQBELs)

Technical Information

Note that the WQBELs developed in the following paragraphs, are calculations of what an effluent limitation may be in a permit. The WQBELs for any given parameter, will be compared to other potential limitations (federal Effluent Limitations Guidelines, State Effluent Limitations, or other applicable limitation) and typically the more stringent limit is incorporated into a permit. If the WQBEL is the more stringent limitation, incorporation into a permit is dependent upon a reasonable potential analysis.

In-stream background data and low flows evaluated in Section IV are used to determine the assimilative capacity of the South Platte River near the City of Sterling proposed WTP for pollutants of concern, and to calculate the WQBELs. For all parameters except ammonia, it is the Division's approach to calculate the WQBELs using the lowest of the monthly low flows (referred to as the annual low flow) as determined in the low flow analysis. For ammonia, it is the standard procedure of the Division to determine monthly WQBELs using the monthly low flows, as the regulations allow the use of seasonal flows.

The Division's standard analysis consists of steady-state, mass-balance calculations for most pollutants and modeling for pollutants such as ammonia. The mass-balance equation is used by the Division to calculate the WQBELs, and accounts for the upstream concentration of a pollutant at the existing quality,

critical low flow (minimal dilution), effluent flow and the water quality standard. The mass-balance equation is expressed as:

$$M_2 = \frac{M_3Q_3 - M_1Q_1}{Q_2}$$

Where,

Q_1 = Upstream low flow (1E3 or 30E3)
Q_2 = Average daily effluent flow (design capacity)
Q_3 = Downstream flow ($Q_1 + Q_2$)
M_1 = In-stream background pollutant concentrations at the existing quality
M_2 = Calculated WQBEL
M_3 = Water Quality Standard, or other maximum allowable pollutant concentration

The upstream background pollutant concentrations used in the mass-balance equation will vary based on the regulatory definition of existing ambient water quality. For most pollutants, existing quality is determined to be the 85th percentile. For metals in the total or total recoverable form, existing quality is determined to be the 50th percentile. For pathogens such as fecal coliform and *E. coli*, existing quality is determined to be the geometric mean.

For temperature, the highest 7-day mean (for the chronic standard) of daily average stream temperature, over a seven consecutive day period will be used in calculations of the chronic temperature assimilative capacity, where the daily average temperature should be calculated from a minimum of three measurements spaced equally through the day. The highest 2-hour mean (for the acute standard) of stream temperature will be used in calculations of the acute temperature assimilative capacity. The highest 2-hour mean should be calculated from a minimum of 12 measurements spaced equally through the day.

Calculation of WQBELs

Where a WQBEL is calculated to be a negative number and interpreted to be zero or when the ambient water quality exceeds the in-stream standard, the Division standard procedure is to allocate the water quality standard to prevent further degradation of the receiving waters. The Division's Restoration and Protection Unit investigates issues of water quality standard exceedances. This Unit is tasked with determining if the exceedances are valid and placing the receiving stream on the Clean Water Act Section 303(d) list of impaired waters, if appropriate. If the receiving water is placed on the State's 303(d) list, the Assessment Unit is tasked with developing the Total Maximum Daily Loads (TMDLs) and the Waste Load Allocations (WLAs) to be distributed to the affected facilities.

Chlorine: The mass-balance equation was used to determine the WQBELs for chlorine. There are no point sources discharging total residual chlorine within one mile of the City of Sterling proposed WTP. Because chlorine is rapidly oxidized, in-stream levels of residual chlorine are detected only for a short distance below a source. Ambient chlorine was therefore assumed to be zero.

Using the mass-balance equation provided above, the acute and chronic low flows set out in Section IV, the chlorine background concentration of zero as discussed above, and the in-stream standards for chlorine shown in Section III, the WQBELs for chlorine were calculated. The data used and the resulting WQBELs, M_2, are set forth in Table A-7.

Table A-7

Chlorine Assimilative Capacities

Parameter	Q_1 *(cfs)*	Q_2 *(cfs)*	Q_3 *(cfs)*	M_1 *(mg/l)*	M_3 *(mg/l)*	M_2 *(mg/l)*
Acute Chlorine	18.00	0.74	18.7	0	0.019	***0.48***
Chronic Chlorine	39.00	0.74	39.7	0	0.011	***0.59***

***E. coli*:** Available studies indicate that *Escherichia coli (E. coli)*, which is a subset of fecal coliform, is a better predictor of potential human health impacts from waterborne pathogens. It is the current intention of the Water Quality Control Commission that *E. coli* will be used as the sole pathogen indicator standard for all waters of the state. Therefore limits for only E. coli are calculated. There are no point sources discharging these pathogens within one mile of the City of Sterling proposed WTP. Thus, WQBELs were evaluated separately.

Using the mass-balance equation provided above, the chronic low flow set out in Section IV, the background concentrations contained in Section IV and discussed above, and the chronic in-stream standards for *E. coli* shown in Section II, the WQBELs for *E. coli* were calculated. The data used and the resulting WQBELs, M_2, are set forth in Table A-8.

Table A-8

***E. coli* Assimilative Capacities**

Parameter	Q_1 *(cfs)*	Q_2 *(cfs)*	Q_3 *(cfs)*	M_1 *(#/100 ml)*	M_3 *(#/100 ml)*	M_2 *(#/100 ml)*
E. coli	39.00	0.7	39.7	1	126	***6714***

Nitrates and Nitrites: Using the mass-balance equation provided above, the chronic low flow set out in Section IV, the background concentrations contained in Section IV, and the acute in-stream standards shown in Section III, the acute WQBELs for nitrate and nitrite were calculated. The data used and the resulting WQBELs, M_2, are set forth in Table A-9b.

Metals and Cyanide: The nanofiltration process proposed for this facility will result in concentrated levels of metals and cyanide in the proposed discharge. Thus, the Division is evaluating cyanide and all metals for which there are standards. Using the mass-balance equation provided in the beginning of Section V, the low flows and background concentrations contained in Section III, and the in-stream

standards for metals and cyanide as shown in Section II, the WQBELs were calculated. The data used and the resulting WQBELs, M_2, are set forth in Table A-9a for chronic standards and in Table A-9b for acute standards.

Trihalomethanes: Chlorination during production of potable water may result in elevated levels of trihalomethanes (bromodichloromethane, bromoform, chlorodibromomethane, and chloroform) in the proposed discharge. Using the mass-balance equation provided in the beginning of Section V, the low flows and background concentrations contained in Section III, and the standards in Regulation No. 31, *The Basic Standards and Methodologies for Surface Water*, the WQBELs were calculated. The data used and the resulting WQBELs, M_2, are set forth in Table A-9a for chronic standards.

Table A-9a

Chronic WQBELs

Parameter	*Q_1 (cfs)*	*Q_2 (cfs)*	*Q_3 (cfs)*	*M_1*	*M_3*	*M_2*	*Notes*
DO (mg/l)					NA	*NA*	
pH (su)					6.5-9	*6.5-9*	
Nitrate (mg/l)	39	0.74	39.74	5.1	NA	*NA*	
Nitrite (mg/l)	39	0.74	39.74	0.04	NA	*NA*	
Nitrate+Nitrite (mg/l)	39	0.74	39.74	5.1	NA	*NA*	
As, TR (µg/l)	39	0.74	39.74	0	100	*100*	2
Cd, Dis (µg/l)	39	0.74	39.74	0	6.2	*333*	3
Cr+6, Dis (µg/l)	39	0.74	39.74	0.75	11	*551*	
Cu, Dis (µg/l)	39	0.74	39.74	6.5	29	*1215*	
CN, Free (µg/l)	39	0.74	39.74	0	NA	*NA*	2
Fe, Dis (µg/l)	39	0.74	39.74	11	300	*15531*	
Pb, Dis (µg/l)	39	0.74	39.74	0	11	*591*	3
Mn, Dis (µg/l)	39	0.74	39.74	42	50	*472*	
Hg, Tot (µg/l)	39	0.74	39.74	0	0.01	*0.54*	2
Ni, Dis (µg/l)	39	0.74	39.74	5.3	168	*8743*	
Se, Dis (µg/l)	39	0.74	39.74	5.3	4.6	*4.6*	1
Ag, Dis (µg/l)	39	0.74	39.74	0	3.5	*188*	3
Zn, Dis (µg/l)	39	0.74	39.74	11	382	*19935*	
B, Tot (mg/l)	39	0.74	39.74	0	0.75	*40*	2
Chloride (mg/l)	39	0.74	39.74	86	250	*8893*	
Sulfate (mg/l)	39	0.74	39.74	670	250	*250*	1
Sulfide (mg/l)	39	0.74	39.74	0	0.002	*0.11*	2
Bromodichloromethane	39	0.74	39.74	0	0.55	*30*	2
Bromoform (µg/l)	39	0.74	39.74	0	4.3	*231*	2
Chlorodibromomethane	39	0.74	39.74	0	54	*2900*	2
Chloroform (µg/l)	39	0.74	39.74	0	3.4	*183*	2

Note 1: The existing water quality for this parameter exceeds the water quality standard.

Note 2 : No ambient water quality data available for this parameter.

Note 3: When sample results are found at less than detection levels, a value of zero is used in accordance with the Division's standard approach for summarization and averaging. Thus, a background concentration of zero was assumed to determine assimilative capacities.

Table A-9b

Acute WQBELs

Parameter	*Q_1 (cfs)*	*Q_2 (cfs)*	*Q_3 (cfs)*	*M_1*	*M_3*	*M_2*	*Notes*
Nitrate (mg/l)	18	0.74	18.74	5.1	10	***129***	
Nitrite (mg/l)	18	0.74	18.74	0.04	0.5	***12***	
As, TR (µg/l)	18	0.74	18.74	0	50	***50***	1
Cd, Dis (µg/l)	18	0.74	18.74	0	19	***481***	2
Cr, TR (µg/l)	18	0.74	18.74	0	50	***1266***	1
Cr+6, Dis (µg/l)	18	0.74	18.74	0.75	16	***387***	
Cu, Dis (µg/l)	18	0.74	18.74	6.5	50	***1108***	
CN, Free (µg/l)	18	0.74	18.74	0	5	***127***	1
Fe, Dis (µg/l)	18	0.74	18.74	11	NA	***NA***	
Pb, Dis (µg/l)	18	0.74	18.74	0	281	***7116***	2
Mn, Dis (µg/l)	18	0.74	18.74	42	4738	***118965***	
Hg, Tot (µg/l)	18	0.74	18.74	0	NA	***NA***	1
Ni, Dis (µg/l)	18	0.74	18.74	5.3	1513	***38187***	
Se, Dis (µg/l)	18	0.74	18.74	5.3	18.4	***337***	
Ag, Dis (µg/l)	18	0.74	18.74	0	22	***557***	2
Zn, Dis (µg/l)	18	0.74	18.74	11	379	***9330***	
B, Tot (mg/l)	18	0.74	18.74	0	NA	***NA***	1
Chloride (mg/l)	18	0.74	18.74	86	NA	***NA***	
Sulfate (mg/l)	18	0.74	18.74	670	NA	***NA***	
Sulfide (mg/l)	18	0.74	18.74	0	NA	***NA***	1

Note 1 : No ambient water quality data available for this parameter.

Note 2: When sample results are found at less than detection levels, a value of zero is used in accordance with the Division's standard approach for summarization and averaging. Thus, a background concentration of zero was assumed to determine assimilative capacities.

Arsenic Range: Because total recoverable arsenic assimilative capacities are calculated based on a range of standards, *The Basic Standards and Methodologies for Surface Water* requires further evaluation. Specifically, the regulations state that "Control requirements, such as discharge permit effluent limitations, shall be established using the first number in the range as the ambient water quality target, provided that no effluent limitation shall require an "end-of-pipe" discharge level more restrictive than the second number in the range." Because the acute WQBEL for total recoverable arsenic has been calculated to be less than the second number in the range of standards, the second standard of 50 µg/l (as shown in Table A-3) would instead be substituted as the acute WQBEL for total recoverable arsenic pursuant to the regulations.

Agricultural Use Parameters (SAR, Na and EC):

Section 31.11(1)(a)(iv) of *The Basic Standards and Methodologies for Surface Waters* (Regulation No. 31) includes the narrative standard that State surface waters shall be free of substances that are harmful to the beneficial uses or toxic to humans, animals, plants, or aquatic life. The interpretation of these conditions (i.e., "no harm to plants" and "no harm to the beneficial uses") and how they were to be applied in permits were contemplated by the Division as part of an Agricultural Work Group, and culminated in the most recent policy entitled *Implementing Narrative Standards in Discharge Permits for the Protection of Irrigated Crops* (hereafter the Narrative Standards policy)

Based on available information, the water in the South Platte River is used for irrigation water. The evaluation of the suitability (i.e., quality) of irrigation water is complex and involves the detailed understanding of the interactions of plant tolerances, soil types, and agricultural management practices. Irrigation water has two properties – salinity and sodicity – that can have concurrent impacts on the irrigated crop beneficial use. The Division has thus determined that two parameters, specifically electrical conductivity (EC) and sodium, are the best parameters to regulate in discharge permits to control levels of salts to minimize both the loss of irrigated crop yield and the sodium hazard. This determination shall not be interpreted or applied in a manner inconsistent with section 25-8-104, C.R.S.

In order to establish limits for EC and sodium, the Division must: (1) determine the most sensitive crop usually grown in the area downstream from the discharge and determine the corresponding EC of irrigation water (EC_w) threshold value for no reduction in yield below100%; and (2) determine the sodium absorption ratio (SAR) based on the EC_w value and calculate the maximum sodium that can be discharged, with consideration of existing water quality, to prevent the exceedance of the SAR.

Electrical Conductivity: The electrical conductivity (EC) is also known as specific conductance, conductance, conductivity, or specific conductivity. Crops have varying sensitivity to electrical conductivity. Studies have established the maximum conductivity in the water in the root zone that will result in no reduction of crop yield. This value is referred to as the EC saturation extract or EC_e. However, the EC_e is not the same as the EC of the irrigation water (EC_w). The EC_w is the maximum conductivity in the irrigation water that will result in no reduction in crop yield.

Common crop EC_w thresholds are reproduced from the Narrative Standards policy, and are summarized in Table A-10a.

Table A-10a

Maximum EC_w That Will Not Reduce The 100% Yield of Selected Irrigated Crops

Common Colorado Crops	*Irrigation Water Electrical Conductivity (EC_w)*
Beans	0.7
Onion	0.8
Corn (grain)	1.1
Potato	1.1
Corn (silage)	1.2
Alfalfa	1.3
Wheat	4.0
Sugarbeet	4.7
Barley	5.3

The EC_w that is used in the development of permit limits is determined based on the most sensitive of the EC_w's for the crops grown in the area. Based on available information from the Logan County Economic Development Corporation, beans are grown in Logan County and are assumed to be irrigated with water from the South Platte River. Beans are the most sensitive crop of those listed in Table A-10a and the EC value is 0.7

The ambient EC level (85th percentile) from Table A-6 is 1.9, which is greater than the above EC limit based on selection of beans as the most sensitive crop. Since, under the Division's policy WPQ-24, the ambient level can be used instead of the limit based on the most sensitive crop, the EC limit is 1.9.

Sodium and SAR – SAR means Sodium Adsorption Ratio, which is a representation of the relative proportion of sodium cations to calcium and magnesium cations (also known as the "sodium hazard").

The SAR standard is established using Figure A-2, which is reproduced herein from the Narrative Standards policy. According to this graphic , the EC_w 0.7 which corresponds to the EC_w for the most sensitive crop of beans, would be used to establish a SAR standard of 1.5. However, as stated above, the SAR can be based on the ambient level when the ambient exceeds the selected SAR.. The ambient SAR (85th percentile) from Table A-6 is 2.7. The associated cation values are: sodium (160 mg/l), calcium (170 mg/l), and magnesium (62 mg/l). Given the SAR is most sensitive to sodium, the value for sodium (i.e. 160 mg/l) will be used as the limit.

The SAR limit was not selected based on the ambient EC value (1.9),since this would result in a abnormally high SAR value of over 8 (Figure A-2) which is more than twice the maximum ambient value of 2.9.

Figure A-2: Relative Rate of Water Infiltration as Affected by EC_w and SAR with Modification to Show Upper Limit for SAR = 9

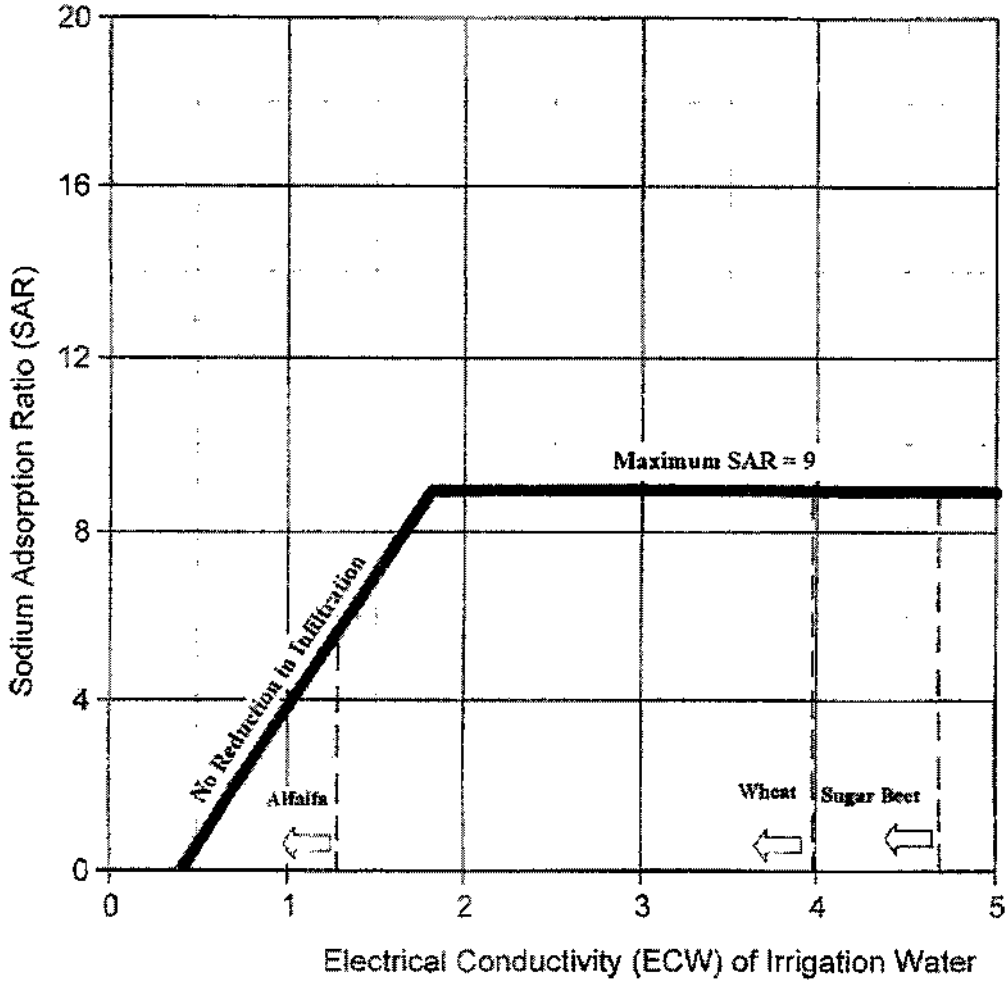

In addition to the sodium limit, monitoring and reporting for calcium and magnesium, as well as calculating and reporting the SAR, will be required as part of a future permit and therefore these parameters are also included as PELs.

VII. Antidegradation Evaluation

As set out in *The Basic Standards and Methodologies for Surface Water*, Section 31.8(2)(b), an antidegradation analysis is required except in cases where the receiving water is designated as "Use Protected." Note that "Use Protected" waters are waters "that the Commission has determined do not warrant the special protection provided by the outstanding waters designation or the antidegradation review process" as set out in Section 31.8(2)(b). The antidegradation section of the regulation became effective in December 2000, and therefore antidegradation considerations are applicable to this PEL analysis.

According to the *Classifications and Numeric Standards for South Platte River Basin, Laramie River Basin, Republican River Basin, Smoky Hill River Basin*, stream segment COSPLS01 is Use Protected. Because the receiving waters are designated as Use Protected, no antidegradation review is necessary in accordance with the regulations. Thus, for purposes of this PELs analysis, antidegradation review requirements have been met and no further antidegradation evaluation is necessary.

VIII. Regulatory Analysis

Regulation No. 62, the Regulations for Effluent Limitations, includes effluent limitations (for BOD5, TSS, $CBOD_5$, residual chlorine, pH, and oil and grease) that apply to all discharges of wastewater to State waters, with the exception of storm water and agricultural return flows. These regulations are applicable to discharges from the proposed City of Sterling WTP and require limitations for listed pollutants that may, without treatment, be present in a discharge at a level approaching the limits established by the Regulation. Pollutants of concern for this facility listed by Regulation No. 62 are chlorine, which is used as a disinfectant in water treatment plants, and TSS, which may be present in the proposed discharge due to filter backwashing, and pH.

Table A-10 contains a summary of the applicable limitations for pollutants of concern at this facility.

Table A-10

Specific Limitations for the Discharge of Wastes

Parameter	7-Day Average	30-Day Average	Instantaneous Maximum
Total Suspended Solids (TSS)	45 mg/L	30 mg/L	NA
Residual Chlorine	NA	NA	0.5 mg/L
pH	NA	NA	6.0 - 9.0 s.u.
Oil and Grease			10 mg/L

Section 62.4(1) of the *Regulations for Effluent Limitations* also indicates that numeric limitations for fecal coliform shall be determined. The State has developed the *Procedure for Selection of Fecal Coliform Limitations Permit Conditions* that specifies a 30-day geometric mean maximum limit of 6,000 colonies per 100 ml and a 7-day geometric mean maximum limit of 12,000 colonies per 100 ml when the ratio of the receiving stream flow to design flow is greater than ten to one. The *Procedure for Selection of Fecal Coliform Limitations Permit Conditions* also specifies that the 7-day geometric mean limit must be calculated as two times the 30-day geometric mean limit. Comparably, for *E. coli*, the Division establishes the 7-day geometric mean limit as two times the 30-day geometric mean limit and also includes maximum limits of 2,000 colonies per 100 ml (30-day geometric mean) and 4,000 colonies per 100 ml (7-day geometric mean).

IX. Preliminary Effluent Limits

The potential PELs reflected in Table A-11 include the consideration of the following:

- Assimilative capacities as discussed in the technical analysis contained in Section VI
- Effluent limits based on narrative standards, as shown in Section III
- Effluent limits prescribed by the regulations based on the regulatory analysis provided in Section VIII.

Table A-11

City of Sterling proposed WTP

Preliminary Effluent Limits for Discharge to the South Platte River

TSS, mechanical plant (mg/l)	45 (7-day average), 30 (30-day average)
Oil and Grease (mg/l)	10 (maximum)
Other Pollutants	***Max. Limits or WQBELs***
DO (mg/l)	5 (minimum)
pH (s.u.)	6.5-9.0 (minimum-maximum)
E. coli (#/100 ml)	4000 (7-day geomean), 2000 (30-day geomean)
TRC (mg/l)	0.48 (daily maximum), 0.59 (30-day average)
Nitrate (mg/l)	129 (daily maximum)
Nitrite (mg/l)	12 (daily maximum)
Metals and Cyanide	***WQBELs***
As, TR (µg/l)	50 (daily maximum)
Cd, Dis (µg/l)	481 (daily maximum), 333 (30-day average)
Cr+3, TR (µg/l)	1266 (daily maximum)
Cr+6, Dis (µg/l)	387 (daily maximum), 551 (30-day average)
Cu, Dis (µg/l)	1108 (daily maximum), 1215 (30-day average)
CN, Free (µg/l)	127 (daily maximum)
Fe, Dis (µg/l)	NA (daily maximum), 15531 (30-day average)
Fe, TR (µg/l)	NA (daily maximum), 53703 (30-day average)
Pb, Dis (µg/l)	7116 (daily maximum), 591 (30-day average)
Mn, Dis (µg/l)	118965 (daily maximum), 472 (30-day average)
Hg, Tot (µg/l)	NA (daily maximum), 0.54 (30-day average)
Ni, Dis (µg/l)	38187 (daily maximum), 8743 (30-day average)
Se, Dis (µg/l)	337 (daily maximum), 4.6 (30-day average)
Ag, Dis (µg/l)	557 (daily maximum), 188 (30-day average)
U, Dis (µg/l)	279124 (daily maximum), 368719 (30-day average)
Zn, Dis (µg/l)	9330 (daily maximum), 19935 (30-day average)
B, Tot (mg/l)	NA (daily maximum), 40 (30-day average)
Chloride (mg/l)	NA (daily maximum), 8893 (30-day average)
Sulfate (mg/l)	NA (daily maximum), 250 (30-day average)
Sulfide (mg/l)	NA (daily maximum), 0.11 (30-day average)
Calcium (mg/l)	Report (30-day average)
Magnesium (mg/l)	Report (30-day average)
Sodium (mg/l)	NA (daily maximum), 160 (30-day average)
Bromodichloromethane (µg/l)	NA (daily maximum), 30 (30-day average)
Bromoform (µg/l)	NA (daily maximum), 231 (30-day average)
Chlorodibromomethane (µg/l)	NA (daily maximum), 2900 (30-day average)
Chloroform (µg/l)	NA (daily maximum), 183 (30-day average)

X. References

Regulations:

The Basic Standards and Methodologies for Surface Water, Regulation 31, Colorado Department Public Health and Environment, Water Quality Control Commission, effective May 31, 2008.

Classifications and Numeric Standards for South Platte River Basin, Laramie River Basin, Republican River Basin, Smoky Hill River Basin, Regulation No. 38, Colorado Department Public Health and Environment, Water Quality Control Commission, effective 3/1/2008.

Water-Quality-Limited Segments Requiring Total Maximum Daily Loads, Regulation 93, Colorado Department Public Health and Environment, Water Quality Control Commission, effective April 30, 2008.

Colorado's Monitoring and Evaluation List, Regulation 94, Colorado Department Public Health and Environment, Water Quality Control Commission, effective April 30, 2008.

Policy and Guidance Documents:

Antidegradation Significance Determination for New or Increased Water Quality Impacts, Procedural Guidance, Colorado Department Public Health and Environment, Water Quality Control Division, December 2001.

Memorandum Re: First Update to (Antidegradation) Guidance Version 1.0, Colorado Department Public Health and Environment, Water Quality Control Division, April 23, 2002.

Rationale for Classifications, Standards and Designations of Segments of the South Platte River, Colorado Department Public Health and Environment, Water Quality Control Division, effective October 29, 2002.

Colorado Mixing Zone Implementation Guidance, Colorado Department Public Health and Environment, Water Quality Control Division, effective April 2002.

Policy for Conducting Assessments for Implementation of Temperature Standards in Discharge Permits, Colorado Department Public Health and Environment, Water Quality Control Division Policy Number WQP-23, effective July 3, 2008.

Implementing Narrative Standards in Discharge Permits for the Protection of Irrigated Crops, Colorado Department Public Health and Environment, Water Quality Control Division Policy Number WQP-24, effective March 10, 2008.

Policy for Characterizing Ambient Water Quality for Use in Determining Water Quality Standards Based Effluent Limits, Colorado Department Public Health and Environment, Water Quality Control Division Policy Number WQP-19, effective May 2002.

Other:

Colorado Discharge Permit System (CDPS) Permit No. CO-0026247, Summary of Rationale, City of Sterling WWTP, Issued June 30, 2003. Expiration July 31, 2008.

STATE OF COLORADO

Bill Ritter, Jr., Governor
James B. Martin, Executive Director

Dedicated to protecting and improving the health and environment of the people of Colorado

4300 Cherry Creek Dr. S.
Denver, Colorado 80246-1530
Phone (303) 692-2000
TDD Line (303) 691-7700
Located in Glendale, Colorado

http://www.cdphe.state.co.us

Laboratory Services Division
8100 Lowry Blvd.
Denver, Colorado 80230-6928
(303) 692-3090

Colorado Department
of Public Health
and Environment

February 27, 2008

Joseph D. Kiolbasa
City of Sterling
421 N. 4th Street, P.O. Box 4000
Sterling, CO 80751

Re: PEL 230008 (Groundwater) for Proposed City of Sterling Water Treatment Plant

Dear Mr. Kiolbasa:

The Water Quality Control Division (Division) of the Colorado Department of Public Health and Environment has prepared, per your request, the Preliminary Effluent Limits (PELs) for the City's proposed water treatment plant (WTP). These effluent limits were developed, as detailed in the attached document, for use as one of the submittals in your application for Site Approval.

PELs developed for the WTP (Table 1) are based on effluent limits for pollutants of concern as established in the *Regulations for Effluent Limitations* (Regulation No. 62), and water quality-based effluent limits (see the analysis in the attached document) necessary for protection of the water quality in the receiving water. With a proposed average daily discharge rate of 0.48 million gallons per day (MGD) and discharge into the groundwater recharge basins identified as Outfall 002A by CDPS Permit No. CO-002647, the WTP will require an individual permit.

A PELs evaluation is attached to document the findings and decisions that were used to derive the PELs in Table 1.

Table 1 **City of Sterling Water Treatment Plant** **Preliminary Effluent Limits for a Proposed Discharge to Groundwater**	
Technology Based Limitations	
TSS	45 mg/L (7-day average), 30 mg/L (30-day average)
Other Pollutants	WQBELs
Total Trihalomethanes	80 µg/L
Bromoform	4.0 µg/L

	City of Sterling Proposed WTP
Bromodichloromethane	0.56 µg/L
Chloroform	3.5 µg/L
Dibromochloromethane	14 µg/L
TDS	At 0 – 500 mg/L background TDS: 400 mg/L or 1.25 times the background level, whichever is least restrictive
	At 501 – 10,000 mg/L background TDS: 1.25 times the background value
	At 10,0001 mg/L or greater background TDS: No limit
Aluminum	5 mg/L (dissolved)
Antimony	0.006 mg/L(dissolved)
Arsenic	0.01 mg/L (dissolved)
Barium	2.0 mg/L (dissolved)
Beryllium	0.004 mg/L (dissolved)
Boron	0.75 mg/L (dissolved)
Cadmium	0.005 mg/L (dissolved)
Chromium	0.1 mg/L (dissolved)
Cobalt	0.05 mg/L(dissolved)
Copper	0.2 mg/L (dissolved)
Cyanide (free)	0.2 mg/L
Fluoride	2.0 mg/L (dissolved)
Iron	0.3 mg/L (dissolved)
Lead	0.05 mg/L (dissolved)
Lithium	2.5 mg/L (dissolved)
Manganese	0.05 mg/L (dissolved)
Mercury (inorganic)	0.002 mg/L (dissolved)
Molybdenum	0.035 mg/L (dissolved)
Nickel	0.1 mg/L (dissolved)
Selenium	0.02 mg/L (dissolved)
Silver	0.05 mg/L (dissolved)
Thallium	0.002 mg/L (dissolved)
Uranium	0.03 mg/L (dissolved)
Zinc	2.0 mg/L (dissolved)
pH	6.5 – 8.5
Americium	0.15 pCi/L (total)
Cesium 134	80 pCi/L (total)
Plutonium 239 and 240	0.15 pCi/L (total)
Radium 226 and 228	5 pCi/L (total)
Strontium 90	8 pCi/L (total)
Thorium 230 and 232	60 pCi/L (total)
Tritium	20,000 pCi/L (total)

If you have any questions regarding this matter, please contact me at (303) 692-3524.

Sincerely,

Gary Beers
Water Quality Control Division
Permits Section

cc: Dennis Pontius, WQCD – Engineering Section
Melanuie Criswell – WQCD-Engineering Section
File : PEL 230008 GW

APPENDIX A
PRELIMINARY EFFLUENT LIMITATIONS
Groundwater
City of Sterling Proposed Water Treatment Plant

Table of Contents

I. PRELIMINARY EFFLUENT LIMITATIONS SUMMARY 1
II. INTRODUCTION 2
III. WATER QUALITY STANDARDS 4
Narrative Standards 4
Numeric Standards 4
IV. RECEIVING WATER INFORMATION 7
Low Flow Analysis 7
Mixing Zones 7
V. FACILITY INFORMATION AND POLLUTANTS EVALUATED 8
Facility Information 8
Pollutants of Concern 8
VI. DETERMINATION OF WATER QUALITY BASED EFFLUENT LIMITATIONS (WQBELS) 9
Technical Information 9
Calculation of WQBELs 10
VII. ANTIDEGRADATION EVALUATION 10
VIII. REGULATORY ANALYSIS 10
IX. PRELIMINARY EFFLUENT LIMITS 10
X. REFERENCES 12

I. Preliminary Effluent Limitations Summary

Table A-1 includes summary information related to this PEL. This summary table includes key regulatory starting points used in development of the PEL such as: receiving stream information; threatened and endangered species; 303(d) and 305(b) listings; low flow and facility flow summaries; and a list of parameters evaluated.

Table A-1
PEL Summary

Facility Information			
Facility Name	**Permit Number**	**Design Flow (max 30-day avg, MGD)**	**Design Flow (max 30-day avg, CFS)**
City of Sterling WTP	PEL230008 GW	0.48	0.74

Receiving Stream Information			
Receiving Stream	**Segment**	**Designation**	**Classification(s)**

Name	ID		
Groundwater	N/A	Not Classified	Domestic Use – Quality Agricultural Use - Quality

Low Flows (cfs)			
1E3 (1-day)	**7E3 (7-day)**	**30E3 (30-day)**	**Ratio of 30E3 to the Design Flow (cfs)**
0.0	0.0	0.0	0.0

Regulatory Information					
T&E Species	**303(d) (Reg 93)**	**TMDL Status**	**305(b) (Reg 94)**	**Temporary Modification(s)**	**Control Regulation**
N/A	N/A	N/A	N/A	N/A	N/A

Pollutants Evaluated
List pollutants evaluated: total residual chlorine, common trihalomethanes (chloroform, chlorodibromomethane, dichlorobromomethane, and bromoform), pH, total dissolved solids (TDS), total suspended solids (TSS), radionuclides, and the following inorganics in source water that will be concentrated in the brine waste resulting from nanofiltration: antimony, aluminum, arsenic, barium, beryllium, boron, chloride, fluoride, iron, lead, lithium, cadmium, chromium, cobalt, copper, manganese, mercury, molybdenum, nickel, selenium, silver, sulfate, thallium, vanadium, zinc, and uranium.

II. Introduction

The preliminary effluent limitations (PEL) for discharge to groundwater recharge basins designated as Outfall 002A by CDPS Permit No. CO-0026247, located in Logan County, is intended to determine the assimilative capacities available for pollutants found to be of concern. This PEL describes how the water quality based effluent limits (WQBELs) are developed. These parameters may or may not appear in the permit with limitations or monitoring requirements, subject to other determinations such as reasonable potential analysis, evaluation of federal effluent limitation guidelines, implementation of state-based technology based limits, mixing zone analyses, 303(d) listings, threatened and endangered species listing, or other requirements as discussed in the permit rationale. Figure A-1 contains a map of the study area evaluated as part of this PEL.

FIGURE A-1

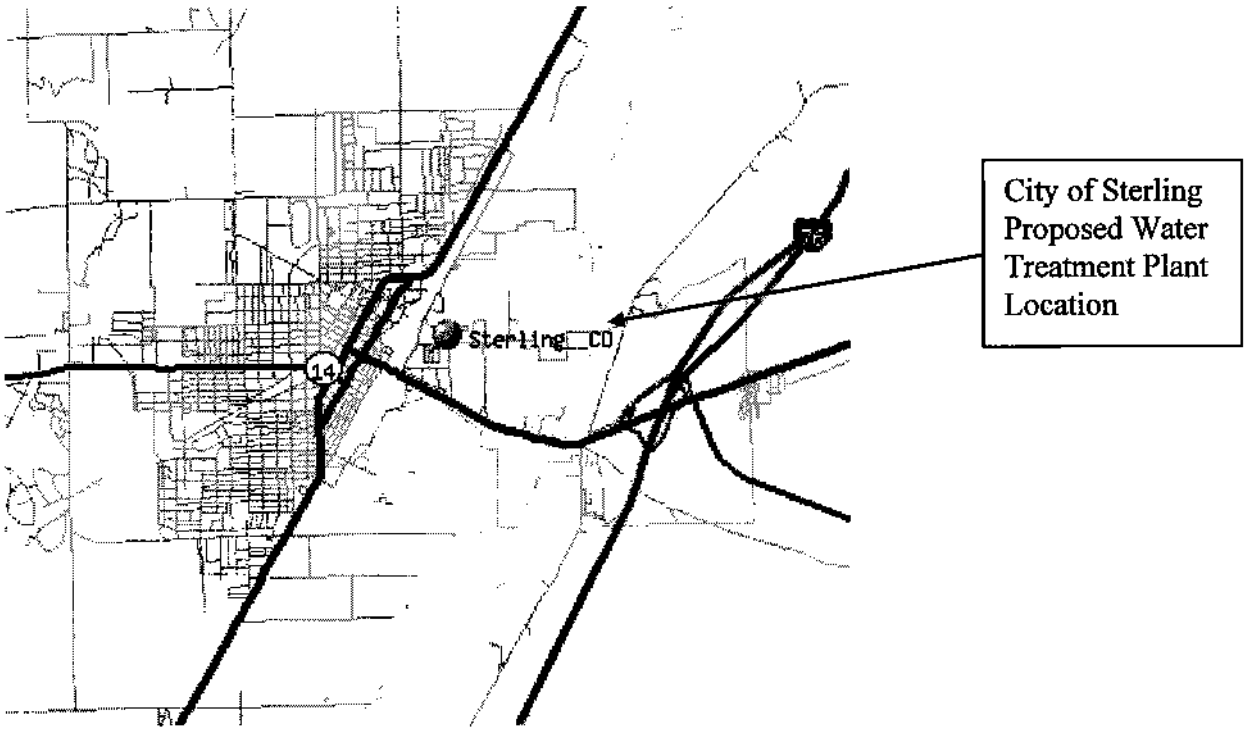

The City's proposed WTP will discharge to groundwater recharge basins, which are established as Outfall 002A by CDPS Permit No. CO-0026247. CDPS Permit No. CO-0026247 authorizes discharges from the City's Wastewater Treatment Plant to groundwater, and the City is now evaluating a possible discharge from a proposed WTP to these same groundwater recharge basins. The receiving water/groundwater for the proposed discharge is not within a classified area pursuant to *Regulation No. 42, Site-Specific Water Quality Classifications and Standards for Groundwater*, and therefore applicable use classifications and water quality criteria are established by *Regulation No. 41, The Basic Standards for Groundwater*. Given the proximity of the proposed outfall to the municipal area of Sterling and the common agricultural use of local groundwater, for determination of PELs, the Division is assuming the use classifications of domestic use – quality and agricultural use - quality.

Information used in this assessment includes data gathered from the City of Sterling WTP, the Division, the Colorado Division of Water Resources (DWR), and the U.S. Environmental Protection Agency (EPA). The data used in the assessment consist of the best information available at the time of preparation of this PELs analysis.

III. Water Quality Standards

Narrative Standards

Narrative standards for groundwater have been developed in Section 41.5 (A) of the regulations, and apply to all State groundwaters, unless site-specific standards have been adopted in Regulation No. 42. The narrative standards state that groundwaters of the State shall be free from pollutants not listed in the tables in section 41.5 (B), which alone or in combination with other substances, are in concentrations shown to be:

(i) Carcinogenic, mutagenic, teratogenic, or toxic to human beings, and/or

(ii) A danger to the public health, safety, or welfare.

Numeric Standards

Radionuclide's: Statewide Standards for groundwater have been developed in section 41.5 (C) of The Basic Standards for Groundwater.

In no case shall radioactive materials in groundwaters exceed the following levels, presented in table A-2, unless alternative site-specific standards are adopted by the Commission.

Table A-2
Radionuclide Standards

Parameter	Picocuries per Liter
Americium*	0.15
Cesium 134	80
Plutonium 239* and 240*	0.15
Radium 226* and 228*	5
Strontium 90*	8
Thorium 230* and 232*	60
Tritium	20,000

*Radionuclide samples for these materials should be analyzed using unfiltered (total) samples. In site-specific cases, when it has been demonstrated that there are negligible differences between the results of dissolved (filtered) samples and total (unfiltered) samples, then dissolved results may be utilized for implementing the radioactive material standards..

Organics: The organic pollutant standards contained in section 41.5, Table A of the Basic Standards for Groundwater are applicable to all groundwaters of the State, unless alternative site-specific standards have been adopted. These standards have been adopted as "interim standards" and will remain in effect until alternative permanent standards are adopted by the Commission. These interim standards shall not be considered final or permanent standards subject to antibacksliding or downgrading restrictions. Although not reproduced in their entirety in this PEL, the specific standards for organic chemicals can be found in Regulation 41.5 (C) (3). The following standards

for the common trihalomethanes from section 41.5, Table A are presented here and are applicable to the receiving water/groundwater for the proposed discharge.

Table A-3 **Trihalomethane Standards for Groundwater**	
Total Trihalomethanes	80 µg/L
Bromoform	4.0 µg/L
Bromodichloromethane	0.56 µg/L
Chloroform	3.5 µg/L
Dibromochloromethane	14 µg/L

Total Dissolved Solids (TDS): The following standards for TDS, contained in section 41.5 (b) (4), Table 4 of the Basic Standards for Groundwater, are applicable to groundwaters with the use designation of Agricultural Use – Quality.

Table A-4 **Maximum Allowable TDS Concentration in Discharges to Groundwater**	
Background TDS Value in Groundwater (mg/L)	Maximum Allowable TDS Concentration in the Discharge (mg/L)
0 - 500	400 mg/L or 1.25 times the background level, whichever is least restrictive
501 – 10,000	1.25 times the background value
10,0001 or greater	No limit

Specific Numeric Standards for Domestic Use - Quality: The pollutant standards contained in section 41.5 (B), Tables 1 and 2, from the Basic Standards for Groundwater are applicable to all groundwaters of the State with the use designation of Domestic Use – Quality. The following standards are applicable to the proposed discharge.

Table A-5 **Groundwater Standards for Domestic Use – Quality [a]**	
Human Health Standards	
Total Coliforms (30-day avg)	2.2 organisms/100 mL
Total Coliforms (max in 30-days)	23 organisms/100 mL
Antimony [b]	0.006 mg/L
Asbestos	7,000,000 fibers/liter
Arsenic [b]	0.01 mg/L
Barium [b]	2.0 mg/L
Beryllium [b]	0.004 mg/L
Cadmium [b]	0.005 mg/L
Chromium [b c]	0.1 mg/L
Cyanide (free)	0.2 mg/L

Fluoride [b]	4.0 mg/L
Lead [b]	0.05 mg/L
Mercury (inorganic) [b]	0.002 mg/L
Molybdenum [b]	0.035 mg/L
Nickel [b]	0.1 mg/L
Nitrate	10 mg/L N
Nitrite	1.0 mg/L N
Total Nitrite plus Nitrate	10 mg/L N
Selenium[b]	0.05 mg/L
Silver [b]	0.05 mg/L
Thallium [b]	0.002 mg/L
Uranium [b]	0.03 mg/L
Gross Alpha Particle Activity	15 pCi/L
Beta and Photon Emitters	4 mrem/yr
Drinking Water Standards	
Chlorophenol	0.0002 mg/L
Chloride [b]	250 mg/L
Color	15 color units
Copper [b]	1 mg/L
Corrosivity	Noncorrosive
Foaming Agents	0.5 mg/L
Iron [b]	0.3 mg/L
Manganese [b]	0.05 mg/L
Odor	3 threshold odor numbers
pH	6.5 – 8.5
Phenol	0.3 mg/L
Sulfate [b]	250 mg/L
Zinc [b]	5 mg/L

[a] Where the value expressed in the table is exceeded by the background level, the applicable standard shall be either (1) the table value or (2) the background level. This determination shall be made considering the risk to public health, crops, or livestock associated with the background levels; the extent of the exceedance above the table value; the degree to which the pollution is deemed correctable and subject to treatment; and the economic reasonableness of such treatment requirements.

[b] Measured as dissolved concentration.

[c] The chromium standard is based on the total concentration of both trivalent and hexavalent forms of dissolved chromium.

Specific Numeric Standards for Agricultural Use - Quality: The pollutant standards contained in section 41.5 (B), Table 3, from the Basic Standards for Groundwater are applicable to all groundwaters of the State with the use designation of Agricultural Use – Quality. The following standards are applicable to the proposed discharge.

Table A-6 Groundwater Standards for Agricultural Use – Quality	
Parameter	**Standard**
Aluminum [b]	5 mg/L
Arsenic [b]	0.1 mg/L
Beryllium [b]	0.1 mg/L
Boron [b d]	0.75 mg/L
Cadmium [b]	0.01 mg/L
Chromium [b]	0.1 mg/L
Cobalt [b]	0.05 mg/L
Copper [b]	0.2 mg/L
Fluoride [b]	2.0 mg/L
Iron [b]	5.0 mg/L
Lead [b c]	0.1 mg/L
Lithium [b]	2.5 mg/L
Manganese [b]	0.2 mg/L
Mercury [b]	0.01 mg/L
Nickel [b]	0.2 mg/L
Nitrite [b]	10 mg/L N
Nitrite plus Nitrate [b]	100 mg/L N
Selenium [b]	0.02 mg/L
Vanadium [b]	0.1 mg/L
Zinc [b]	2.0 mg/L
pH	6.5 – 8.5

[a] Where the value expressed in the table is exceeded by the background level, the applicable standard shall be either (1) the table value or (2) the background level. This determination shall be made considering the risk to public health, crops, or livestock associated with the background levels; the extent of the exceedance above the table value; the degree to which the pollution is deemed correctable and subject to treatment; and the economic reasonableness of such treatment requirements.

[b] Measured as dissolved concentration.

[c] Where a party can demonstrate that a livestock watering use of groundwater is not reasonably expected, the applicable standard for lead is 5.0 mg/L

[d] where a party can demonstrate that a crop watering use of groundwater is not reasonably expected, the applicable standard for boron is 5.0 mg/L.

IV. Receiving Water Information

Low Flow Analysis

For discharges to groundwater the Division assumes zero low flow in the receiving water.

Mixing Zones

The Division does not currently approve mixing zones for discharges to groundwater.

V. Facility Information and Pollutants Evaluated

Facility Information

The City of Sterling has proposed a Water Treatment Plant (WTP) in Logan County with the following design discharge figures.

- Average Daily Flow = 0.48 mgd
- Peak Monthly Flow = 0.84 mgd
- Peak Daily Flow = 1.2 mgd

The WTP will discharge at Outfall 002A as authorized by CDPS Permit No. CO-0026247. This outfall serves a discharge to groundwater by the City of Sterling municipal wastewater treatment facility. Due to the in-stream low flow of zero, the assimilative capacity of the receiving water is not affected by nearby contributions.

Pollutants of Concern

Pollutants of concern may be determined by one or more of the following: facility type; effluent characteristics and chemistry; effluent water quality data; receiving water quality; presence of federal effluent limitation guidelines; or other information. Parameters evaluated in this PEL may or may not appear in a permit with limitations or monitoring requirements, subject to other determinations such as a reasonable potential analysis, mixing zone analyses, 303(d) listings, threatened and endangered species listings or other requirement as discussed in a permit rationale.

The following parameters were identified by the Division as pollutants to be evaluated for this facility:

- Total Residual Chlorine
- Disinfection byproducts - the common trihalomethanes (chloroform, chlorodibromomethane, dichlorobromomethane, and bromoform)
- pH, DO, *E. Coli*
- Radionuclides
- Naturally occurring TDS and the following inorganics in source water that will be concentrated in the brine waste resulting from nanofiltration: antimony, aluminum, arsenic, barium, beryllium, boron, chloride, fluoride, iron, lead, lithium, cadmium, chromium, cobalt, copper, manganese, mercury, molybdenum, nickel, selenium, silver, sulfate, thallium, vanadium, zinc, and uranium.

During assessment of the facility and the proposed discharge to groundwater no additional parameters were identified as pollutants of concern.

VI. Determination of Water Quality Based Effluent Limitations (WQBELs)

Technical Information

Note that the WQBELs developed in the following paragraphs, are calculations of what an effluent limitation may be in a permit. The WQBELs for any given parameter, will be compared to other potential limitations (federal Effluent Limitations Guidelines, State Effluent Limitations, or other applicable limitation) and typically the more stringent limit is incorporated into a permit. If the WQBEL is the more stringent limitation, incorporation into a permit is dependent upon a reasonable potential analysis.

In-stream background data and low flows evaluated in Section IV are used to determine the assimilative capacity of the receiving water/groundwater for the proposed discharge from the City of Sterling WTP for pollutants of concern, and to calculate the WQBELs. For all parameters except ammonia, it is the Division's approach to calculate the WQBELs using the lowest of the monthly low flows (referred to as the annual low flow) as determined in the low flow analysis. For ammonia, it is the standard procedure of the Division to determine monthly WQBELs using the monthly low flows, as the regulations allow the use of seasonal flows.

The Division's standard analysis consists of steady-state, mass-balance calculations for most pollutants and modeling for pollutants such as ammonia. The mass-balance equation is used by the Division to calculate the WQBELs, and accounts for the upstream concentration of a pollutant at the existing quality, critical low flow (minimal dilution), effluent flow and the water quality standard. The mass-balance equation is expressed as:

$$M_2 = \frac{M_3 Q_3 - M_1 Q_1}{Q_2}$$

Where,

Q_1 = Upstream low flow (1E3 or 30E3)
Q_2 = Average daily effluent flow (design capacity)
Q_3 = Downstream flow ($Q_1 + Q_2$)
M_1 = In-stream background pollutant concentrations at the existing quality
M_2 = Calculated WQBEL
M_3 = Water Quality Standard, or other maximum allowable pollutant concentration

When Q_1 equals zero, Q_2 equals Q_3, and the following results:

$$M_2 = M_3$$

Because the low flow (Q_1) for this receiving water/groundwater is zero, the WQBELs for the pollutants of concern are equal to the in-stream water quality standards.

A more detailed discussion of the technical analysis is provided in the pages that follow.

Calculation of WQBELs

Using the mass-balance equation provided above, when the instream low flow is zero, $M_2 = M_3$, or WQBELs for pollutants of concern are equal to the in-stream water quality standards.

VII. Antidegradation Evaluation

Because the proposed discharge is to groundwater, an antidegradation review is not required.

VIII. Regulatory Analysis

Regulation No. 62, the Regulations for Effluent Limitations, includes effluent limitations (for BOD5, TSS, $CBOD_5$, residual chlorine, pH, and oil and grease) that apply to all discharges of wastewater to State waters, with the exception of storm water and agricultural return flows. These regulations are applicable to discharges from the proposed City of Sterling WTP and require limitations for listed pollutants that may, without treatment, be present in a discharge at a level approaching the limits established by the Regulation. Pollutants of concern for this facility listed by Regulation No. 62 are chlorine, which is used as a disinfectant in water treatment plants, and TSS, which may be present in the proposed discharge due to filter backwashing, and pH.

Table A-7 contains a summary of the applicable limitations for pollutants of concern identified by Regulation No. 62.

Table A-7
Specific Limitations for the Discharge of Wastes

Parameter	7-Day Average Limitation	30-Day Average Limitation	Instantaneous Maximum
Total Suspended Solids (TSS)	45 mg/L	30 mg/L	---
Residual Chlorine	NA	NA	0.5 mg/L
pH	NA	NA	6.0 - 9.0 s.u.

IX. Preliminary Effluent Limits

The potential PELs reflected in Table A-8 include the consideration of the following:

- Assimilative capacities as discussed in the technical analysis contained in Section VI
- Effluent limits based on narrative standards, as shown in Section III
- Effluent limits prescribed by the regulations based on the regulatory analysis provided in Section VIII.

Table A-8 City of Sterling Water Treatment Plant Preliminary Effluent Limits for a Proposed Discharge to Groundwater	
Technology Based Limitations	
TSS	45 mg/L (7-day average), 30 mg/L (30-day average)
Other Pollutants	WQBELs
Total Trihalomethanes	80 µg/L
Bromoform	4.0 µg/L
Bromodichloromethane	0.56 µg/L
Chloroform	3.5 µg/L
Dibromochloromethane	14 µg/L
TDS	At 0 – 500 mg/L background TDS: 400 mg/L or 1.25 times the background level, whichever is least restrictive
	At 501 – 10,000 mg/L background TDS: 1.25 times the background value
	At 10,0001 mg/L or greater background TDS: No limit
Aluminum	5 mg/L (dissolved)
Antimony	0.006 mg/L(dissolved)
Arsenic	0.01 mg/L (dissolved)
Barium	2.0 mg/L (dissolved)
Beryllium	0.004 mg/L (dissolved)
Boron	0.75 mg/L (dissolved)
Cadmium	0.005 mg/L (dissolved)
Chromium	0.1 mg/L (dissolved)
Cobalt	0.05 mg/L(dissolved)
Copper	0.2 mg/L (dissolved)
Cyanide (free)	0.2 mg/L
Fluoride	2.0 mg/L (dissolved)
Iron	0.3 mg/L (dissolved)
Lead	0.05 mg/L (dissolved)
Lithium	2.5 mg/L (dissolved)
Manganese	0.05 mg/L (dissolved)
Mercury (inorganic)	0.002 mg/L (dissolved)
Molybdenum	0.035 mg/L (dissolved)
Nickel	0.1 mg/L (dissolved)
Selenium	0.02 mg/L (dissolved)
Silver	0.05 mg/L (dissolved)
Thallium	0.002 mg/L (dissolved)
Uranium	0.03 mg/L (dissolved)
Zinc	2.0 mg/L (dissolved)
pH	6.5 – 8.5
Americium	0.15 pCi/L (total)
Cesium 134	80 pCi/L (total)
Plutonium 239 and 240	0.15 pCi/L (total)

Radium 226 and 228	5 pCi/L (total)
Strontium 90	8 pCi/L (total)
Thorium 230 and 232	60 pCi/L (total)
Tritium	20,000 pCi/L (total)

X. References

Regulations:

The Basic Standards and Methodologies for Surface Water, Regulation 31, Colorado Department Public Health and Environment, Water Quality Control Commission, effective May 31, 2008.

Site-Specific Water Quality Classifications and Standards for Groundwater, Regulation No. 42, Colorado Department Public Health and Environment, Water Quality Control Commission, effective March 30, 2006.

The Basic Standards for Groundwater, Regulation No. 41, Colorado Department Public Health and Environment, Water Quality Control Commission, effective May 31, 2008.

Water-Quality-Limited Segments Requiring Total Maximum Daily Loads, Regulation 93, Colorado Department Public Health and Environment, Water Quality Control Commission, effective April 30, 2008.

Colorado's Monitoring and Evaluation List, Regulation 94, Colorado Department Public Health and Environment, Water Quality Control Commission, effective April 30, 2006.

Policy and Guidance Documents:

Antidegradation Significance Determination for New or Increased Water Quality Impacts, Procedural Guidance, Colorado Department Public Health and Environment, Water Quality Control Division, December 2001.

Memorandum Re: First Update to (Antidegradation) Guidance Version 1.0, Colorado Department Public Health and Environment, Water Quality Control Division, April 23, 2002.

Rationale for Classifications, Standards and Designations of Segments of the South Platte River, Colorado Department Public Health and Environment, Water Quality Control Division, effective October 29, 2002.

Colorado Mixing Zone Implementation Guidance, Colorado Department Public Health and Environment, Water Quality Control Division, effective April 2002.

Policy for Conducting Assessments for Implementation of Temperature Standards in Discharge Permits, Colorado Department Public Health and Environment, Water Quality Control Division Policy Number WQP-23, effective July 3, 2008.

Implementing Narrative Standards in Discharge Permits for the Protection of Irrigated Crops, Colorado Department Public Health and Environment, Water Quality Control Division Policy Number WQP-24, effective March 10, 2008.

Policy for Characterizing Ambient Water Quality for Use in Determining Water Quality Standards Based Effluent Limits, Colorado Department Public Health and Environment, Water Quality Control Division Policy Number WQP-19, effective May 2002.

Other:

Colorado Discharge Permit System (CDPS) Permit No. CO-0026247, Summary of Rationale, City of Sterling WWTP, Issued June 30, 2003. Expiration July 31, 2008.

Appendix K

Membrane Modeling

Reverse Osmosis System Analysis for FILMTEC™ Membranes
Project: Scenario-5a1 (BASELINE CONDITION 1-PASS)
Shahnawaz Sinha,

ROSA v6.1.5 ConfigDB U238786_55
Case: 1
12/29/2008

Project Information:- Scenario-5a1 (Baseline Condition, Single pass with NF90-400) - We have raw water quality from several well sites. This one is for the average WQ of Site1 only.

System Details

Feed Flow to Stage 1	2857143.00 gpd	Pass 1 Permeate Flow	1999874.15 gpd	Osmotic Pressure:	
Raw Water Flow to System	2857143.00 gpd	Pass 1 Recovery	70.00 %	Feed	7.10 psig
Feed Pressure	92.00 psig	Feed Temperature	17.0 C	Concentrate	20.97 psig
Fouling Factor	0.85	Feed TDS	1217.80 mg/l	Average	14.03 psig
Chem. Dose	None	Number of Elements	378	Average NDP	52.76 psig
Total Active Area	151200.00 ft²	Average Pass 1 Flux	13.23 gfd	Power	111.96 kW
Water Classification: Well Water SDI < 3				Specific Energy	1.34 kWh/kgal

Stage	Element	#PV	#Ele	Feed Flow (gpd)	Feed Press (psig)	Recirc Flow (gpd)	Conc Flow (gpd)	Conc Press (psig)	Perm Flow (gpd)	Avg Flux (gfd)	Perm Press (psig)	Boost Press (psig)	Perm TDS (mg/l)
1	NF90-400	36	7	2857143.00	87.00	0.00	1343005.42	53.15	1514137.58	15.02	0.00	0.00	45.87
2	NF90-400	18	7	1343005.42	73.15	0.00	857268.85	37.36	485736.57	9.64	0.00	25.00	110.71

Pass Streams (mg/l as Ion)								
Name	Feed	Adjusted Feed		Concentrate		Permeate		
		Initial	After Recycles	Stage 1	Stage 2	Stage 1	Stage 2	Total
NH4	0.00	0.00	0.00	0.00	0.00	0.00	0.00	0.00
K	10.00	10.00	10.00	16.90	22.24	3.88	7.46	4.75
Na	120.00	120.00	120.00	246.21	374.12	8.06	20.46	11.07
Mg	41.00	41.00	41.00	86.71	135.17	0.46	1.18	0.63
Ca	163.79	163.79	163.79	346.44	540.09	1.79	4.66	2.49
Sr	1.10	1.10	1.10	2.33	3.63	0.01	0.03	0.02
Ba	0.08	0.08	0.08	0.16	0.26	0.00	0.00	0.00
CO3	1.10	1.10	1.10	4.62	9.95	0.00	0.01	0.00
HCO3	238.00	238.00	238.00	486.41	736.94	13.60	34.52	18.68
NO3	18.00	18.00	18.00	30.61	40.51	6.82	13.13	8.35
Cl	75.00	75.01	75.01	153.92	233.83	5.02	12.90	6.94
F	0.70	0.70	0.70	1.43	2.17	0.05	0.13	0.07
SO4	512.00	512.00	512.00	1083.80	1690.72	4.82	12.66	6.73
SiO2	37.00	37.00	37.00	77.19	118.92	1.35	3.56	1.89
Boron	0.00	0.00	0.00	0.00	0.00	0.00	0.00	0.00
CO2	6.12	6.12	6.12	7.42	9.14	6.42	7.88	6.78
TDS	1217.78	1217.80	1217.80	2536.74	3908.56	45.87	110.71	61.62
pH	7.70	7.70	7.70	7.87	7.93	6.57	6.86	6.68

Permeate Flux reported by ROSA is calculated based on ACTIVE membrane area. DISCLAIMER: NO WARRANTY, EXPRESSED OR IMPLIED,AND NO WARRANTY OF MERCHANTABILITY OR FITNESS, IS GIVEN. Neither FilmTec Corporation nor The Dow Chemical Company assume liability for results obtained or damages incurred from the application of this information. FilmTec Corporation and The Dow Chemical Company assume no liability, if, as a result of customer's use of the ROSA membrane design software, the customer should be sued for alleged infringement of any patent not owned or controlled by the FilmTec Corporation nor The Dow Chemical Company.

Reverse Osmosis System Analysis for FILMTEC™ Membranes
Project: Scenario-5a1 (BASELINE CONDITION 1-PASS)
Shahnawaz Sinha,

ROSA v6.1.5 ConfigDB U238786_55
Case: 1
12/29/2008

Design Warnings

-None-

Solubility Warnings

Langelier Saturation Index > 0
Stiff & Davis Stability Index > 0
BaSO4 (% Saturation) > 100%
CaF2 (% Saturation) > 100%
SiO2 (% Saturation) > 100%
Antiscalants may be required. Consult your antiscalant manufacturer for dosing and maximum allowable system recovery.

Stage Details

Stage 1 Element	Recovery	Perm Flow (gpd)	Perm TDS (mg/l)	Feed Flow (gpd)	Feed TDS (mg/l)	Feed Press (psig)
1	0.10	7954.42	27.01	79365.08	1217.80	87.00
2	0.10	7169.31	32.38	71410.66	1350.30	79.73
3	0.10	6476.66	38.75	64241.35	1497.22	73.47
4	0.10	5861.88	46.32	57764.69	1660.55	68.09
5	0.10	5322.74	55.25	51902.81	1842.62	63.45
6	0.10	4846.85	65.81	46580.07	2046.58	59.47
7	0.11	4427.51	78.31	41733.22	2276.29	56.06
Stage 2 Element	**Recovery**	**Perm Flow (gpd)**	**Perm TDS (mg/l)**	**Feed Flow (gpd)**	**Feed TDS (mg/l)**	**Feed Press (psig)**
1	0.08	5932.74	65.68	74611.41	2536.74	73.15
2	0.07	5140.83	79.25	68678.67	2749.86	66.38
3	0.07	4413.76	95.79	63537.85	2965.57	60.34
4	0.06	3748.52	116.07	59124.09	3179.44	54.90
5	0.06	3133.47	141.44	55375.56	3386.46	49.97
6	0.05	2565.67	173.90	52242.09	3580.75	45.46
7	0.04	2050.38	216.17	49676.43	3756.40	41.28

Permeate Flux reported by ROSA is calculated based on ACTIVE membrane area. DISCLAIMER: NO WARRANTY, EXPRESSED OR IMPLIED,AND NO WARRANTY OF MERCHANTABILITY OR FITNESS, IS GIVEN. Neither FilmTec Corporation nor The Dow Chemical Company assume liability for results obtained or damages incurred from the application of this information. FilmTec Corporation and The Dow Chemical Company assume no liability, if, as a result of customer's use of the ROSA membrane design software, the customer should be sued for alleged infringement of any patent not owned or controlled by the FilmTec Corporation nor The Dow Chemical Company.

Scaling Calculations

	Raw Water	Adjusted Feed	Concentrate
pH	7.70	7.70	7.93
Langelier Saturation Index	0.50	0.50	1.69
Stiff & Davis Stability Index	0.76	0.76	1.52
Ionic Strength (Molal)	0.03	0.03	0.09
TDS (mg/l)	1217.78	1217.80	3908.56
HCO3	238.00	238.00	736.94
CO2	6.12	6.12	9.14
CO3	1.10	1.10	9.95
CaSO4 (% Saturation)	15.37	15.37	84.92
BaSO4 (% Saturation)	1208.66	1208.66	3769.10
SrSO4 (% Saturation)	7.13	7.13	26.13
CaF2 (% Saturation)	10.67	10.67	337.21
SiO2 (% Saturation)	33.94	33.94	104.28
Mg(OH)2 (% Saturation)	0.00	0.00	0.03

To balance: 0.01 mg/l Cl added to feed.

Reverse Osmosis System Analysis for FILMTEC™ Membranes ROSA v6.1.5 ConfigDB U238786_55
Project: Scenario-8a Case: 1
Shahnawaz Sinha, 12/29/2008

Project Information:- Scenario-8a (Dual pass/ NF-90-400 in 1st and 2nd pass) - We have raw water quality from several well sites. This one is for the average WQ of Site1 only

System Details

Feed Flow to Stage 1	2570000.00 gpd	Pass 1 Permeate Flow	2005153.61 gpd	Osmotic Pressure:	
Raw Water Flow to System	2570000.00 gpd	Pass 1 Recovery	78.02 %	Feed	20.97 psig
Feed Pressure	115.56 psig	Feed Temperature	17.0 C	Concentrate	80.79 psig
Fouling Factor	0.85	Feed TDS	3908.66 mg/l	Average	50.88 psig
Chem. Dose	None	Number of Elements	378	Average NDP	58.64 psig
Total Active Area	151200.00 ft²	Average Pass 1 Flux	13.26 gfd	Power	128.10 kW
Water Classification: Well Water SDI < 3				Specific Energy	1.53 kWh/kgal

Stage	Element	#PV	#Ele	Feed Flow (gpd)	Feed Press (psig)	Recirc Flow (gpd)	Conc Flow (gpd)	Conc Press (psig)	Perm Flow (gpd)	Avg Flux (gfd)	Perm Press (psig)	Boost Press (psig)	Perm TDS (mg/l)
1	NF90-400	36	7	2570000.00	110.56	0.00	1054735.36	83.65	1515264.64	15.03	0.00	0.00	146.60
2	NF90-400	18	7	1054735.36	118.65	0.00	564846.39	95.97	489888.97	9.72	0.00	40.00	414.22

Pass Streams (mg/l as Ion)								
Name	Feed	Adjusted Feed		Concentrate		Permeate		
		Initial	After Recycles	Stage 1	Stage 2	Stage 1	Stage 2	Total
NH4	0.00	0.00	0.00	0.00	0.00	0.00	0.00	0.00
K	22.24	22.24	22.24	41.12	60.11	9.10	19.22	11.57
Na	374.12	374.15	374.15	872.56	1559.97	27.22	79.98	40.11
Mg	135.17	135.17	135.17	326.98	606.23	1.66	5.00	2.47
Ca	540.09	540.09	540.09	1306.71	2422.95	6.47	19.67	9.69
Sr	3.63	3.63	3.63	8.78	16.28	0.04	0.13	0.07
Ba	0.26	0.26	0.26	0.63	1.17	0.00	0.01	0.00
CO3	10.01	10.01	10.01	40.37	100.53	0.02	0.08	0.03
HCO3	736.94	736.94	736.94	1696.49	2998.26	46.44	136.50	68.44
NO3	40.51	40.51	40.51	75.51	111.28	16.15	34.26	20.57
Cl	233.83	233.83	233.83	545.27	974.36	17.04	50.54	25.23
F	2.17	2.17	2.17	5.04	8.96	0.18	0.51	0.26
SO4	1690.72	1690.72	1690.72	4094.45	7598.87	17.55	53.83	26.41
SiO2	118.92	118.92	118.92	282.96	515.79	4.74	14.50	7.12
Boron	0.00	0.00	0.00	0.00	0.00	0.00	0.00	0.00
CO2	9.08	9.08	9.08	17.71	32.92	11.20	21.44	13.70
TDS	3908.63	3908.66	3908.66	9296.88	16974.78	146.60	414.22	211.98
pH	7.93	7.93	7.93	7.91	7.81	6.83	6.99	6.90

Permeate Flux reported by ROSA is calculated based on ACTIVE membrane area. DISCLAIMER: NO WARRANTY, EXPRESSED OR IMPLIED,AND NO WARRANTY OF MERCHANTABILITY OR FITNESS, IS GIVEN. Neither FilmTec Corporation nor The Dow Chemical Company assume liability for results obtained or damages incurred from the application of this information. FilmTec Corporation and The Dow Chemical Company assume no liability, if, as a result of customer's use of the ROSA membrane design software, the customer should be sued for alleged infringement of any patent not owned or controlled by the FilmTec Corporation nor The Dow Chemical Company.

Reverse Osmosis System Analysis for FILMTEC™ Membranes
Project: Scenario-8a
Shahnawaz Sinha,

ROSA v6.1.5 ConfigDB U238786_55
Case: 1
12/29/2008

Design Warnings

-None-

Solubility Warnings

Langelier Saturation Index > 0
Stiff & Davis Stability Index > 0
CaSO4 (% Saturation) > 100%
BaSO4 (% Saturation) > 100%
SrSO4 (% Saturation) > 100%
CaF2 (% Saturation) > 100%
SiO2 (% Saturation) > 100%
Antiscalants may be required. Consult your antiscalant manufacturer for dosing and maximum allowable system recovery.

Stage Details

Stage 1 Element	Recovery	Perm Flow (gpd)	Perm TDS (mg/l)	Feed Flow (gpd)	Feed TDS (mg/l)	Feed Press (psig)
1	0.12	8393.01	77.29	71388.89	3908.66	110.56
2	0.12	7510.01	95.31	62995.88	4418.11	104.37
3	0.12	6688.85	118.08	55485.87	5002.02	99.19
4	0.12	5919.97	147.06	48797.01	5670.09	94.86
5	0.12	5196.13	184.22	42877.04	6431.01	91.26
6	0.12	4512.13	232.26	37680.91	7290.53	88.26
7	0.12	3870.57	294.58	33168.77	8248.53	85.75
Stage 2 Element	**Recovery**	**Perm Flow (gpd)**	**Perm TDS (mg/l)**	**Feed Flow (gpd)**	**Feed TDS (mg/l)**	**Feed Press (psig)**
1	0.11	6289.26	217.77	58596.41	9296.88	118.65
2	0.10	5349.99	274.88	52307.15	10385.83	113.92
3	0.10	4486.06	348.53	46957.16	11534.87	109.87
4	0.09	3704.50	443.59	42471.10	12713.35	106.37
5	0.08	3016.58	565.49	38766.60	13882.70	103.32
6	0.07	2428.39	720.11	35750.03	15003.35	100.61
7	0.06	1941.28	912.48	33321.64	16041.42	98.19

Permeate Flux reported by ROSA is calculated based on ACTIVE membrane area. DISCLAIMER: NO WARRANTY, EXPRESSED OR IMPLIED,AND NO WARRANTY OF MERCHANTABILITY OR FITNESS, IS GIVEN. Neither FilmTec Corporation nor The Dow Chemical Company assume liability for results obtained or damages incurred from the application of this information. FilmTec Corporation and The Dow Chemical Company assume no liability, if, as a result of customer's use of the ROSA membrane design software, the customer should be sued for alleged infringement of any patent not owned or controlled by the FilmTec Corporation nor The Dow Chemical Company.

Scaling Calculations

	Raw Water	Adjusted Feed	Concentrate
pH	7.93	7.93	7.81
Langelier Saturation Index	1.70	1.70	2.80
Stiff & Davis Stability Index	1.52	1.52	2.05
Ionic Strength (Molal)	0.09	0.09	0.41
TDS (mg/l)	3908.63	3908.66	16974.78
HCO3	736.94	736.94	2998.26
CO2	9.08	9.08	32.91
CO3	10.01	10.01	100.53
CaSO4 (% Saturation)	84.92	84.92	518.86
BaSO4 (% Saturation)	3809.68	3809.68	17847.55
SrSO4 (% Saturation)	26.15	26.15	134.02
CaF2 (% Saturation)	338.08	338.08	25858.57
SiO2 (% Saturation)	104.10	104.10	486.84
Mg(OH)2 (% Saturation)	0.03	0.03	0.08

To balance: 0.03 mg/l Na added to feed.

STERLING NF for Selected Scenarios

																		Stage-1					Stage-2				
Scenarios	Purpose	Raw Flow	Permeate Flow	**Recovery**	Surface Area Estimated[1]	Array X-X-X-/Y	Array X-X-X	Total Area required for this scenario	Additional area to estimate	**Feed Temp**	**Feed Pressure**	**Perm Pressure 1st Stage**	**1st Stage Boost Pressure**	**2nd Stage Boost Pressure**	**Total Number of Elements**	Element/ vessel	**Total Number of vessels**	Membrane Type	# Pressure vessel	Overall Avg. Flux	**Flux rate for the 1st Element**	Recovery	Membrane Type	# Pressure vessel	Overall Avg Flux	**Flux rate for the last Element**	Recovery
		(gallon/day)	(gallon/day)	**(%)**	(ft2)	Stages	Ratio	(ft2)	(%)	**(oC)**	**(psi)**	**(psi)**	**(psi)**	**(psi)**	**(#)**	(#)	**(#)**		(#)	(gfd)	**(gfd)**	(%)		(#)	(gfd)	**(gfd)**	(%)
Case-5a1	**Scenario-1 (Single pass/ NF90-400)**	**2,857,143**	**1,999,874**	**70%**	**86,951**	**36-18-0/7**	**2:1**	**151,200**	**42%**	**17**	**92**	**0**	**-**	**25**	**378**	**7**	**54**	**NF90-400**	**36**	**15**	**20**	**53%**	**NF90-400**	**18**	**10**	**5**	**36%**
Case-5a1	**Scenario-2 (Dual pass/ NF90-400 in 1st Pass)**	**2,857,143**	**1,999,874**	**70%**	**86,951**	**36-18-0/7**	**2:1**	**151,200**	**42%**	**17**	**92**	**0**	**-**	**25**	**378**	**7**	**54**	**NF90-400**	**36**	**15**	**20**	**53%**	**NF90-400**	**18**	**10**	**5**	**36%**
Case-8a	**Scenario-2 (Dual pass/ Conc. storage/ NF90-400 in 2nd Pass)**	**2,570,000**	**2,004,897**	**78%**	**87,169**	**36-18-0/7**	**2:1**	**151,200**	**42%**	**17**	**116**	**0**	**-**	**40**	**378**	**7**	**54**	**NF90-400**	**36**	**15**	**21**	**59%**	**NF90-400**	**18**	**10**	**5**	**46%**

NOTES:

[1] Based on Flux rate of 23 gfd

Appendix L

Property Deeds

662517 01/21/2004 10:30A B950 P573 QCD
1 of 2 R 11.00 D 0.00 N 0.00 Logan County CO

QUIT CLAIM DEED

THIS DEED, made this 19th day of January, 2004 effective retroactively, January 1, 2001, between **PLATTE RIVER COMPANIES, INC., a Colorado corporation, formerly STERLING REDI-MIX COMPANY, a Colorado corporation sometimes written as STERLING REDI-MIX CO.**, whose legal address is P.O. Box 1908, Sterling, Colorado, Grantor, and **CITY OF STERLING, COLORADO,** whose legal address is 421 North Fourth Street, P.O. Box 4000, Sterling, Colorado 80751-0400, Grantee,

WITNESSETH, That Grantor, for and in consideration of those obligations of the City of Sterling as set forth in that Agreement between the City of Sterling and Sterling Redi-Mix Company dated March 23, 1999, effective, January 1, 2001, and other good and valuable consideration, the receipt and sufficiency of which is hereby acknowledged, has remised, released, sold conveyed and QUIT CLAIMED, and by these presents does remise, release, sell convey and QUIT CLAIM unto the Grantee, its successors and assigns, forever, all the right, title, interest, claim and demand which the Grantor has in and to the real property, together with improvements, if any, situate, lying and being in the County of Logan and State of Colorado, described as follows:

State Documentary Fee
Date 1-21-2004
$ None Made

A part of the SW 1/4SW 1/4 of Section 27, Township 8 North, Range 52 West of the 6th P.M., Logan County, Colorado, described as follows:

Beginning at a point on the West line of said Section 27, 200 feet South of the Northwest corner of the SW1/4 SW1/4 of said Section 27; thence South along the West line of Section 27, 500 feet; thence East to the Smith and Henderson Ditch; thence North along the Smith and Henderson Ditch, 500 feet; thence West to the point of beginning; and

A tract of land located in the SW 1/4 of Section 27, Township 8 North, Range 52, West of the 6th P.M., which tract is more particularly described as follows:

Beginning at a point 200 feet South of the Northwest corner of the SW 1/4 SW1/4 of said Section 27; thence East 910.0 feet to the Henderson Ditch; thence North 06◦30' East 200 feet; thence North 15◦50' West 744.0 feet to the C.B. & Q. Railroad right-of-way; thence South 79◦00' West 743.4 feet along the South side of said C.B. & Q. Railroad right-of-way; thence South 772.7 feet to the place of beginning, comprising 16.67 acres, more or less.

TO HAVE AND TO HOLD the same, together with all and singular the appurtenances and privileges thereunto belonging or in anywise thereunto appertaining, and all the estate, right title, interest and claim whatsoever, of the Grantor, either in law or equity, to the only proper use, benefit and behoff of the Grantee, its successors and assigns forever.

PLATTE RIVER COMPANIES, INC., f/k/a
STERLING REDI-MIX COMPANY,
A Colorado corporation
By: _____
President

640153 04/12/2000 11:50A B928 P209 WD
1 of 3 R 15.00 D 169.00 N 0.00 Logan County CO

WARRANTY DEED

JOHN D. SCALVA, a single person, whose address is 13407 County Road 370, Sterling, County of Logan, State of Colorado, DOMINIC SCALVA, JR., a single person, whose address is 1330 North Sidney Avenue, Sterling, County of Logan, State of Colorado, ANTHONY SCALVA, a married person dealing in his separate property, whose address is 13442 County Road 370, Sterling, County of Logan, State of Colorado, and RITA SCALVA, a single person, whose address is 13407 County Road 370, Sterling, County of Logan, State of Colorado, Grantors, for the consideration of Ten Dollars ($10.00) and other good and valuable consideration, in hand paid, hereby sell and convey to THE CITY OF STERLING, COLORADO, a home rule municipality, organized pursuant to the statutes of the State of Colorado, whose legal address is Centennial Square, P.O. Box 4000, Sterling, County of Logan, and State of Colorado, the following real property in the County of Logan, and State of Colorado, to wit:

SEE EXHIBIT A, ATTACHED HERETO AND INCORPORATED HEREIN BY REFERENCE;

TOGETHER WITH all water and water rights appurtenant thereto, all rights to the Henderson and Smith Ditch, and all water adjudicated for use thereon, as more fully described in Decree of July 16, 1938 as the 12.5 cubic feet of water per second of time allowed to flow therein under Priority No. 9, being formerly numbered Priority No. 8, being formerly numbered Priority No. 6;

with all its appurtenances, and warrant the title to the same, subject to taxes for the year 2000, due and payable in 2001, and thereafter; rights and liabilities that go with inclusion of the premises within special taxing districts; rights of way and easements in existence or as shown of record; zoning, subdivision regulations or other similar limitations pertaining to the premises or the use thereof; oil, gas and other mineral conveyances, reservations, leases and assignments of record, if any; Agreement dated November 15, 1967 by and between Angela Scalva, John D. Scalva, Dominic Scalva, Jr., Anthony Scalva and Rita Scalva, as parties of the first part, and Texaco Inc., as party of the second part; and reservations, restrictions or limitations, if any, contained in the U.S. and Colorado Patents.

Signed this 12th day of April, 2000.

John D. Scalva
John D. Scalva, a single person

DOMINIC SCALVA
By John D. Scalva
John D. Scalva, Attorney-in-Fact for
Dominic Scalva, Jr., a single person

Anthony Scalva
Anthony Scalva, a married person
dealing in his separate property

Rita Scalva
Rita Scalva, a single person

DOMINIC SCALVA JR
By Margarita Scalva
Margherita Scalva, also known as
Rita Scalva, Attorney-in-Fact for
Dominic Scalva, Jr., a single person

State Documentary Fee
Date 4-12-00
$ 169.00

STATE OF COLORADO)
) ss.
County of Logan)

The foregoing instrument was acknowledged before me this 12th day of April, 2000, by John D. Scalva, a single person, John D. Scalva, Attorney-in-Fact for Dominic Scalva, Jr., a single person, Anthony Scalva, a married person dealing in his separate property, Rita Scalva, a single person, and Margherita Scalva, also known as Rita Scalva, Attorney-in-Fact for Dominic Scalva, Jr., a single person.

My Commission Expires
9/28/2000

My commission expires:
Witness my hand and official seal.

Notary Public

PAUL R. MUSCO
NOTARY PUBLIC
STATE OF COLORADO

Description created by:
Burr D. Leibert
R.L.S. No. 1791
P.O. Box 442, Sterling, CO 80751
Set forth in Survey (C.R.S. § 38-35-106.5)

640153 04/12/2000 11:50A B928 P209 WD
2 of 3 R 15.00 D 169.00 N 0.00 Logan County CO

EXHIBIT A

PARCEL DESCRIPTION

THE SOUTHWEST QUARTER OF THE SOUTHWEST QUARTER (SW1/4SW1/4) OF SECTION THIRTEEN (13), THE SOUTHEAST QUARTER OF THE SOUTHEAST QUARTER (SE1/4SE1/4) OF SECTION FOURTEEN (14), THE SOUTH HALF OF THE SOUTHWEST QUARTER (S1/2SW1/4), THE SOUTHEAST QUARTER (SE1/4), THE SOUTHEAST QUARTER OF THE NORTHEAST QUARTER (SE1/4NE1/4), THE SOUTH HALF OF THE SOUTHWEST QUARTER OF THE NORTHEAST QUARTER (S1/2SW1/4NE1/4) OF SECTION TWENTY-TWO (22), THE NORTH HALF (N1/2), THE NORTH HALF OF THE SOUTHWEST QUARTER (N1/2SW1/4) OF SECTION TWENTY-THREE (23), THE WEST HALF OF THE NORTHWEST QUARTER (W1/2NW1/4), THE NORTHWEST QUARTER OF THE SOUTHWEST QUARTER (NW1/4SW1/4) OF SECTION TWENTY-FOUR (24), THE NORTHWEST QUARTER (NW1/4), THE WEST HALF OF THE NORTHEAST QUARTER (W1/2NE1/4), THE NORTHEAST QUARTER OF THE NORTHEAST QUARTER (NE1/4NE1/4) OF SECTION TWENTY-SEVEN (27), ALL IN TOWNSHIP EIGHT (8) NORTH, RANGE FIFTY-TWO (52) WEST OF THE SIXTH (6TH) P.M., AND ALL OF THAT PART OF THE NORTH HALF OF THE SOUTHWEST QUARTER (N1/2SW1/4) OF SECTION TWENTY-SEVEN (27), TOWNSHIP EIGHT (8) NORTH, RANGE FIFTY-TWO (52), WEST OF THE SIXTH (6TH) P.M., WHICH LIES NORTH OF THE RIGHT-OF-WAY OF THE C.B.&Q. RAILROAD AND WEST OF THE COUNTY ROAD, CONTAINING 1210 ACRES MORE OR LESS.

EXCEPT A PARCEL OF LAND CONVEYED TO LEONARD A. HAGEMEIER IN WARRANTY DEED RECORDED IN BOOK 493 AT PAGE 248 OF THE LOGAN COUNTY RECORDS DESCRIBED AS FOLLOWS:
A PARCEL OF LAND LOCATED IN THE SOUTHWEST QUARTER OF THE NORTHEAST QUARTER (SW1/4NE1/4) OF SECTION TWENTY-SEVEN (27), TOWNSHIP EIGHT (8) NORTH, RANGE FIFTY-TWO (52) WEST OF THE 6TH P. M., MORE PARTICULARLY DESCRIBED AS FOLLOWS:
BEGINNING AT THE SOUTHEAST CORNER OF SAID SW1/4NE1/4 OF SAID SECTION 27, THENCE WEST ALONG THE SOUTH LINE OF SAID SW1/4NE1/4 A DISTANCE OF EIGHT HUNDRED TWENTY-FIVE (825) FEET; THENCE NORTHEASTERLY A DISTANCE OF FIFTEEN HUNDRED EIGHTY-FOUR (1584) FEET TO THE NORTH LINE OF SAID SW1/4NE1/4; THENCE EAST ALONG THE NORTH LINE OF SAID SW1/4NE1/4 A DISTANCE OF FORTY-SIX AND 2/10 (46.2) FEET TO THE NORTHEAST CORNER OF SAID SW1/4NE1/4; THENCE SOUTH ALONG THE EAST LINE OF SAID SW1/4NE1/4 A DISTANCE OF THIRTEEN HUNDRED TWENTY (1320) FEET TO THE POINT OF BEGINNING, CONTAINING FOURTEEN (14) ACRES.

EXCEPT A PARCEL OF LAND CONVEYED TO THE DEPARTMENT OF HIGHWAYS, STATE OF COLORADO, IN SPECIAL WARRANTY DEED RECORDED IN BOOK 607 AT PAGE 78 OF THE LOGAN COUNTY RECORDS DESCRIBED AS FOLLOWS:
A TRACT OR PARCEL OF LAND, NO. 7-REV. GRANTEE'S PROJECT NO.I-80 S-2(4) 121 CONTAINING 31.19 ACRES, MORE OR LESS, IN THE E1/2 OF THE NE1/4 OF SECTION 23, THE W1/2 OF THE NW1/4 OF SECTION 24, THE SW1/4 OF THE SW1/4 OF SECTION 13, TOWNSHIP 8 NORTH, RANGE 52 WEST, OF THE SIXTH PRINCIPAL MERIDIAN, IN LOGAN COUNTY, COLORADO, SAID TRACT OR PARCEL BEING MORE PARTICULARLY DESCRIBED AS FOLLOWS:
BEGINNING AT A POINT ON THE EAST LINE OF SECTION 23, T. 8 N., R. 52 W., FROM WHICH THE NE CORNER OF SECTION 23 BEARS N. 4° 47' W., A DISTANCE OF 897.1 FEET:

1. THENCE ALONG THE ARC OF A CURVE TO THE LEFT, HAVING A RADIUS OF 11,660.0 FEET, A DISTANCE OF 1,597.7 FEET (THE CHORD OF THIS ARC BEARS S. 30° 07' 30" W., A DISTANCE OF 1,596.5 FEET) TO THE SOUTH LINE OF THE NE1/4 OF SECTION 23;
2. THENCE ALONG THE SOUTH LINE OF THE NE1/4 OF SECTION 23, N. 88° 27' E., A DISTANCE OF 454.2 FEET;
3. THENCE ALONG THE ARC OF A CURVE TO THE RIGHT, HAVING A RADIUS OF 11,260.0 FEET, A DISTANCE OF 819.9 FEET (THE CHORD OF THIS ARC BEARS N. 29° 22' E., A DISTANCE OF 819.7 FEET) THE EAST LINE OF SECTION 23;
4. THENCE ALONG THE EAST LINE OF SECTION 23, N. 4° 47' W., A DISTANCE OF 656.4 FEET, MORE OR LESS, TO THE POINT OF BEGINNING.

THE ABOVE DESCRIBED PORTION OF PARCEL NO. 7-REV. CONTAINS 11.13 ACRES, MORE OR LESS.

ALSO

BEGINNING AT A POINT ON THE WEST LINE OF SECTION 24, T. 8 N., R. 52 W., FROM WHICH THE NW CORNER OF SECTION 24 BEARS N. 4° 47' W., A DISTANCE OF 897.1 FEET:

1. THENCE ALONG THE ARC OF A CURVE TO THE RIGHT, HAVING A RADIUS OF 11,660.0 FEET, A DISTANCE OF 1,183.8 FEET (THE CHORD OF THIS ARC BEARS N. 36° 57' 30" E., A DISTANCE OF 1,183.3 FEET) TO THE NORTH LINE OF SECTION 24;
2. THENCE ALONG THE NORTH LINE OF SECTION 24, N. 86° 15' E., A DISTANCE OF 561.7 FEET;
3. THENCE ALONG THE ARC OF A CURVE TO THE LEFT, HAVING A RADIUS OF 11,260.0 FEET, A DISTANCE OF 2,042.3 FEET (THE CHORD OF THIS ARC BEARS S. 36° 38' 30" W., A DISTANCE OF 2,039.5 FEET) TO THE WEST LINE OF SECTION 24;
4. THENCE ALONG THE WEST LINE OF SECTION 24, N. 4° 47' W., A DISTANCE OF 656.4 FEET, MORE OR LESS, TO THE POINT OF BEGINNING.

THE ABOVE DESCRIBED PORTION OF PARCEL NO. 7-REV. CONTAINS 14.78 ACRES, MORE OR LESS.

640153 04/12/2000 11:50A B928 P209 WD
3 of 3 R 15.00 D 169.00 N 0.00 Logan County CO

ALSO

BEGINNING AT A POINT ON THE EAST LINE OF THE W1/2 OF THE SW1/4 OF SECTION 13, T. 8 N., R. 52 W., FROM WHICH THE SW CORNER OF SECTION 13 BEARS S. 61° 30' 30" W., A DISTANCE OF 1,645.2 FEET:

1 THENCE S. 42° 59' W., A DISTANCE OF 336.4 FEET;
2 THENCE ALONG THE ARC OF A CURVE TO THE LEFT, HAVING A RADIUS OF 11,930.0 FEET, A DISTANCE OF 630.4 FEET (THE CHORD OF THIS ARC BEARS S. 41° 25' W., A DISTANCE OF 630.31 FEET) TO THE SOUTH LINE OF SECTION 13;
3 THENCE ALONG THE SOUTH LINE OF SECTION 13, N. 86° 15' E., A DISTANCE OF 561.7 FEET;
4 THENCE ALONG THE ARC OF A CURVE TO THE RIGHT, HAVING A RADIUS OF 11,200.0 FEET, A DISTANCE OF 162.0 FEET (THE CHORD OF THIS ARC BEARS N. 42° 15 E., A DISTANCE OF 162.0 FEET) TO THE EAST LINE OF THE W1/2 OF THE SW1/4 OF SECTION 13;
5 THENCE ALONG THE EAST LINE OF THE W1/2 OF THE SW1/4 OF SECTION 13, N.0° 57' W., A DISTANCE OF 576.9 FEET, MORE OR LESS, TO THE POINT OF BEGINNING

THE ABOVE DESCRIBED PORTION OF PARCEL NO. 7-REV. CONTAINS 5.28 ACRES, MORE OR LESS.

THE ABOVE DESCRIBED PARCEL CONTAINS A TOTAL OF 31.19 ACRES, MORE OR LESS.

EXCEPT A PARCEL OF LAND CONVEYED TO THE DEPARTMENT OF HIGHWAYS, STATE OF COLORADO, IN WARRANTY DEED RECORDED IN BOOK 607 AT PAGE 80 OF THE LOGAN COUNTY RECORDS DESCRIBED AS FOLLOWS

A TRACT OR PARCEL OF LAND NO. 7 B REV. OF THE DEPARTMENT OF HIGHWAYS, STATE OF COLORADO, PROJECT NO. I-NOS 7(49)121 CONTAINING 101 ACRES, MORE OR LESS, IN THE NE1/4 OF SECTION 23, THE W1/2 OF SECTION 24 AND THE SW1/4 OF SECTION 13, ALL IN TOWNSHIP 8 NORTH, RANGE 52 WEST, OF THE SIXTH PRINCIPAL MERIDIAN, IN LOGAN COUNTY, COLORADO, SAID TRACT OR PARCEL BEING MORE PARTICULARLY DESCRIBED AS FOLLOWS:

ALL THAT PORTION OF THE SW1/4 OF THE SW1/4 OF SECTION 13, THE W1/2 OF THE NW1/4 AND THE NW1/4 OF THE SW1/4 OF SECTION 24, AND THE SE1/4 OF THE NE1/4 OF SECTION 23, T. 8 N., R. 52 W., OF THE SIXTH PRINCIPAL MERIDIAN, LYING SOUTH AND EAST OF THE PROPOSED EASTERLY RIGHT OF WAY LINE OF S. H. NO. 2 DESCRIBED AS FOLLOWS:

BEGINNING AT A POINT ON THE EAST LINE OF THE W1/2 OF THE SW1/4 OF SECTION 13, FROM WHICH THE SW CORNER OF SECTION 13 BEARS S. 61° 30' 30" W. A DISTANCE OF 1,645.2 FEET; THENCE S. 0° 57' E. ALONG THE EAST LINE OF THE W1/2 OF THE SW1/4 OF SECTION 13, A DISTANCE OF 576.9 FEET, TO TRUE POINT OF BEGINNING;

1. THENCE ALONG THE ARC OF A CURVE TO THE LEFT, HAVING A RADIUS OF 11,200.0 FEET, A DISTANCE OF 162.0 FEET (THE CHORD OF THIS ARC BEARS S. 42° 15' W. A DISTANCE OF 162.0 FEET), TO THE SOUTH LINE OF SECTION 13;
2. THENCE CONTINUING ALONG THE ARC OF A CURVE TO THE LEFT, HAVING A RADIUS OF 11,200.0 FEET, A DISTANCE OF 2,042.3 FEET (THE CHORD OF THIS ARC BEARS S. 36° 38' 30" W. A DISTANCE OF 2,039.5 FEET) TO THE WEST LINE OF SECTION 24;
3. THENCE CONTINUING ALONG THE ARC OF A CURVE TO THE LEFT, HAVING A RADIUS OF 11,200.0 FEET, A DISTANCE OF 819.9 FEET, (THE CHORD OF THIS ARC BEARS S. 29° 22' W. A DISTANCE OF 819.7 FEET), TO THE SOUTH LINE OF THE NE1/4 OF SECTION 23

THE ABOVE DESCRIBED PARCEL CONTAINS 101 ACRES, MORE OR LESS.

SUBJECT TO DEED OF ACCESS RIGHTS TO THE DEPARTMENT OF HIGHWAYS, STATE OF COLORADO, IN DEED RECORDED IN BOOK 607 AT PAGE 83 OF THE LOGAN COUNTY RECORDS.

EXCEPTED PARCEL NO. 1 QUIT CLAIM DEED RECORDED IN BOOK 917 AT PAGE 862 OF THE LOGAN COUNTY RECORDS DESCRIBED AS FOLLOWS:

A PARCEL OF LAND IN SECTION 23, TOWNSHIP 8 NORTH, RANGE 52 WEST OF THE SIXTH PRINCIPAL MERIDIAN, LOGAN COUNTY, COLORADO, SAID PARCEL BEING MORE PARTICULARLY DESCRIBED AS FOLLOWS:

BEGINNING AT A POINT ON THE EXISTING NORTHWESTERLY RIGHT-OF-WAY FENCE OF COUNTY ROAD 370 FROM WHENCE THE SOUTHWEST CORNER OF SAID SECTION 23 BEARS SOUTH 40°07'30" WEST A DISTANCE OF 2970.9 FEET; THENCE NORTH 3°00'00" WEST A DISTANCE OF 517.8 FEET; THENCE NORTH 49°46'40" EAST A DISTANCE OF 566.8 FEET; THENCE SOUTH 80°03'00" EAST A DISTANCE OF 326.1 FEET TO A POINT ON SAID NORTHWESTERLY RIGHT OF WAY FENCE OF COUNTY ROAD 370; THENCE SOUTH 47°27'20" WEST ALONG THE NORTHWESTERLY RIGHT-OF-WAY FENCE OF COUNTY ROAD 370 A DISTANCE OF 691.9 FEET; THENCE SOUTH 31°31'50" WEST ALONG THE NORTHWESTERLY RIGHT-OF-WAY FENCE OF COUNTY ROAD 370 A DISTANCE OF 429.0 FEET TO THE POINT OF BEGINNING AND CONTAINING 5.28 ACRES, MORE OR LESS.

EXCEPTED PARCEL NO. 2 QUIT CLAIM DEED RECORDED IN BOOK 845 AT PAGE 125 OF THE LOGAN COUNTY RECORDS DESCRIBED AS FOLLOWS:

A TRACT OF LAND IN THE NORTHEAST QUARTER OF THE SOUTHWEST QUARTER (NE1/4SW1/4) OF SECTION 23, TOWNSHIP 8 NORTH, RANGE 52 WEST OF THE 6TH P.M., LOGAN COUNTY, COLORADO, MORE PARTICULARLY DESCRIBED AS FOLLOWS

BEGINNING AT A POINT ON AN EXISTING FENCE LINE FROM WHENCE THE SOUTHWEST CORNER OF SAID SECTION 23 BEARS SOUTH 41°17'40" WEST A DISTANCE OF 1827.2 FEET, SAID POINT BEING THE INTERSECTION OF THE EASTERLY RIGHT OF WAY FENCE OF COUNTY ROAD 370 AND A FENCE LINE FOR THE SOUTH LINE OF SAID NE1/4SW1/4, THENCE NORTH 41°21'20" EAST ALONG SAID EASTERLY RIGHT-OF-WAY FENCE OF COUNTY ROAD 370 A DISTANCE OF 62.0 FEET; THENCE NORTH 41°50'30" EAST ALONG SAID EASTERLY RIGHT-OF-WAY FENCE OF COUNTY ROAD 370 A DISTANCE OF 215.9 FEET; THENCE NORTH 89°04'00" EAST A DISTANCE OF 1230.4 FEET TO A POINT ON AN EXISTING FENCE LINE FOR THE EAST LINE OF SAID NE1/4 SW1/4, THENCE SOUTH 2°19'40" WEST ALONG SAID EXISTING FENCE LINE FOR THE EAST LINE OF SAID NE1/4 SW1/4 A DISTANCE OF 201.7 FEET TO A FENCE CORNER FOR THE SOUTHEAST CORNER OF SAID NE1/4SW1/4, THENCE SOUTH 89°04'00" WEST ALONG SAID EXISTING FENCE LINE FOR THE SOUTH LINE OF SAID NE1/4 SW1/4 A DISTANCE OF 1415.1 FEET TO THE POINT OF BEGINNING AND CONTAINING 6.23 ACRES, MORE OR LESS, SUBJECT TO A RIGHT OF WAY FOR A DOUBLE POLE TRANSMISSION LINE.

EXCEPTED PARCEL NO. 3 DESCRIBED AS FOLLOWS:

A PARCEL OF LAND IN THE NORTH HALF (N1/2) OF SECTION 27, TOWNSHIP 8 NORTH, RANGE 52 WEST OF THE SIXTH PRINCIPAL MERIDIAN, LOGAN COUNTY, COLORADO, SAID PARCEL BEING MORE PARTICULARLY DESCRIBED AS FOLLOWS

BEGINNING AT THE C1/4 CORNER OF SAID SECTION 27; THENCE NORTH 89°56'30" WEST ALONG THE SOUTH LINE OF THE NW1/4 OF SECTION 27 A DISTANCE OF 24.9 FEET; THENCE NORTH 41°55'10" EAST A DISTANCE OF 459.7 FEET, THENCE NORTH 42°22'50" EAST A DISTANCE OF 377.8 FEET; THENCE SOUTH 47°37'10" EAST A DISTANCE OF 260.8 FEET; THENCE SOUTH 29°37'15" WEST ALONG AN EXISTING FENCE LINE A DISTANCE OF 494.9 FEET TO A POINT ON THE SOUTH LINE OF THE NE1/4 OF SECTION 27; THENCE SOUTH 89°12'30" WEST ALONG THE SOUTH LINE OF SAID NE1/4 A DISTANCE OF 485.1 FEET TO THE POINT OF BEGINNING AND CONTAINING 5.00 ACRES, MORE OR LESS.

SUBJECT TO A LIFE ESTATE UNTO JOHN D. SCALVA AND RITA SCALVA, IN JOINT TENANCY, DESCRIBED AS FOLLOWS:

A PARCEL OF LAND IN THE NORTH HALF (N1/2) AND THE SOUTHWEST QUARTER (SW1/4) OF SECTION 27, TOWNSHIP 8 NORTH, RANGE 52 WEST OF THE SIXTH PRINCIPAL MERIDIAN, LOGAN COUNTY, COLORADO, SAID PARCEL BEING MORE PARTICULARLY DESCRIBED AS FOLLOWS:

COMMENCING AT THE C1/4 CORNER OF SAID SECTION 27, THENCE NORTH 89°56'30" WEST ALONG THE SOUTH LINE OF THE NW1/4 OF SECTION 27 A DISTANCE OF 105.1 FEET TO THE TRUE POINT OF BEGINNING, THENCE SOUTH 41°37'25" WEST A DISTANCE OF 400.7 FEET; THENCE NORTH 3°24'30" WEST ALONG AN EXISTING FENCE LINE AND THE SOUTHERLY EXTENSION THEREOF A DISTANCE OF 690.8 FEET; THENCE NORTH 75°43'45" EAST A DISTANCE OF 554.1 FEET, THENCE SOUTH 89°01'40" EAST A DISTANCE OF 226.5 FEET; THENCE SOUTH 42°22'50" WEST A DISTANCE OF 72.7 FEET; THENCE SOUTH 41°55'10" WEST A DISTANCE OF 459.8 FEET; THENCE SOUTH 41°37'25" WEST A DISTANCE OF 53.4 FEET TO THE POINT OF BEGINNING AND CONTAINING 6.39 ACRES, MORE OR LESS.

together with one domestic well and one livestock well appurtenant to said parcel, for and during their natural lives.

TOGETHER WITH A PARCEL OF LAND DESCRIBED IN WARRANTY DEED RECORDED IN BOOK 403 AT PAGE 137 OF THE LOGAN COUNTY RECORDS DESCRIBED AS FOLLOWS:

A PARCEL OF LAND LOCATED IN THE SOUTHWEST QUARTER OF THE SOUTHWEST QUARTER (SW1/4SW1/4) OF SECTION TWENTY THREE (23), TOWNSHIP EIGHT (8) NORTH, RANGE FIFTY-TWO (52) WEST OF THE 6TH P. M., MORE PARTICULARLY DESCRIBED AS FOLLOWS:

BEGINNING AT THE NORTHWEST CORNER OF SAID SW1/4SW1/4 OF SAID SECTION 23, THENCE EAST ALONG THE NORTH LINE OF SAID SW1/4SW1/4 A DISTANCE OF ELEVEN HUNDRED TWENTY-TWO (1122) FEET TO THE RIGHT OF WAY LINE ALONG THE WEST SIDE OF THE COUNTY ROAD; THENCE SOUTHWESTERLY ALONG THE WEST EDGE OF SAID RIGHT OF WAY A DISTANCE OF SIXTEEN HUNDRED FIFTY (1650) FEET TO THE WEST LINE OF SAID SECTION 23; THENCE NORTH ALONG THE WEST LINE OF SAID SECTION 23 A DISTANCE OF ELEVEN HUNDRED TWENTY-TWO (1122) FEET TO THE POINT OF BEGINNING, CONTAINING FOURTEEN ACRES.

State of Colorado

PATENT NO. 5610

To all unto Whom these Presents shall Come: Greeting:

Whereas CITY OF STERLING, Colorado of the County of LOGAN and State of Colorado in accordance with the provisions of the acts of the General Assembly of the State of Colorado, approved and in force at the time of the purchase of the land herein designated and described and at the time of the execution of this conveyance has made full payment as appears from the records of the State Board of Land Commissioners of and for the following described real estate lying and situated in the County of LOGAN and State of Colorado, to-wit:

The Northeast quarter (NE¼) of Section Thirty-four (34), Township Eight (8) North, Range Fifty-two (52) West of the Sixth (6th) Principal Meridian, containing One Hundred and Sixty (160) acres, more or less, according to United States survey.

Reserving, however, to the State of Colorado, all rights to any and all minerals, ores and metals of every kind and character and all coal, asphaltum, oil and other like substances in or under said land and the right of ingress and egress for the purpose of mining, together with enough of the surface of same as may be necessary for the proper and convenient working of such minerals and substances.

Subject to any and all easements or rights-of-way heretofore legally obtained and now in full force and effect, if any there be.

which said described tract of land has been purchased by the said CITY OF STERLING, Colorado for the sum of Two Thousand & no/100 ($ 2,000.00) Dollars.

Now Know Ye, That the State of Colorado in consideration of the premises, and in conformity with the Act of the General Assembly in such case provided, has sold and granted, and by these presents does sell and grant unto the said CITY OF STERLING, Colorado and to its successors and assigns the said tract above described. To Have and to Hold the same as above specified, together with all the rights, privileges, immunities and appurtenances of whatsoever nature hereunto belonging, unto the said CITY OF STERLING, Colorado and to its successors and assigns forever.

In Testimony Whereof, I, Teller Ammons Governor of the State of Colorado have caused these letters to be made Patent, and the Great Seal of the State of Colorado to be hereunto attached.

Given under my Hand at the City of Denver, the twenty-fourth day of November A.D. 19 37.

Teller Ammons
Governor.

Attest: George E. Saunders
Secretary of State of the State of Colorado

Arthur A. King

This Deed, Made this 17th day of September in the year of our Lord one thousand nine hundred and nineteen between

Len U. Sherwin

of the County of Logan, and State of Colorado, of the first part, and

The City of Sterling, a municipal corporation organized and existing under and by virtue of the general laws of the State of Colorado.

of the County of Logan, and State of Colorado, of the second part:

Witnesseth, That the said party of the first part, for and in consideration of the sum of one dollar and other valuable consideration ~~Dollars~~

to the said party of the first part in hand paid by the said party of the second part, the receipt whereof is hereby confessed and acknowledged, has granted, bargained, sold and conveyed, and by these presents does grant, bargain, sell, convey and confirm unto the said party of the second part, its ~~heirs~~ successors and assigns forever, all the following described lot or parcel of land, situate, lying and being in the County of Logan, and State of Colorado, to-wit:

The South Half of the Southwest Quarter (S½SW¼) of Section Thirty-four (34), Township Eight (8) North of Range Fifty-two '52) West of Sixth Principal Meridian, except three acres more or less, in the southwest corner of said land heretofore deeded to the Union Pacific Railroad Company, which is described as follows:

Beginning at the southwest corner of said section thirty-four (34)-thence easterly along the south line of said section a distance of six hundred sixty (660) feet to a point-thence northerly and parallel with the west line of said section a distance of two hundred (200) feet to a point-thence westerly and parallel with the south line of said section a distance of six hundred sixty (660) feet to a point on the west line of said section -thence south along said west line a distance of two hundred (200) feet to the point of beginning, containing an area of three and thirty-three thousandths (3.033) acres, more or less, together with the right of easement for the pipe line of said railroad company, also subject to rights of way for public roads as now constructed across said land.

Party of the first part reserves the windmill and water tanks and about one-fourth mile of fence being North of said windmill.

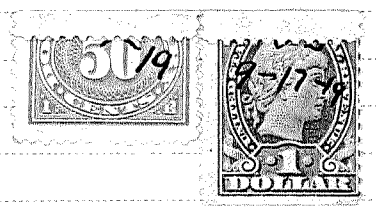

Together With all and singular the hereditaments and appurtenances thereunto belonging, or in anywise appertaining, and the reversion and reversions, remainder and remainders, rents, issues and profits thereof; and all the estate, right, title, interest, claim and demand whatsoever of the said party of the first part, either in law or equity, of, in and to the above bargained premises, with the hereditaments and appurtenances.

To Have and to Hold The said premises above bargained and described, with the appurtenances, unto the said party of the second part, its ~~heirs~~ successors and assigns forever. And the said

Len U. Sherwin

party of the first part, for himself, his heirs, executors and administrators, does covenant, grant, bargain and agree to and with the said party of the second part, its ~~heirs~~ successors and assigns, that at the time of the ensealing and delivery of these presents he is well seized of the premises above conveyed, as of good, sure, perfect, absolute and indefeasible estate of inheritance, in law, in fee simple, and has good right, full power and lawful authority to grant, bargain, sell and convey the same, in manner and form aforesaid, and that the same are free and clear from all former and other grants, bargains, sales, liens, taxes, assessments and incumbrances of whatever kind or nature soever;

and the above bargained premises, in the quiet and peaceable possession of the said party of the second part, its ~~heirs~~ successors and assigns, against all and every person or persons lawfully claiming or to claim the whole or any part thereof, the said party of the first part shall and will **Warrant and Forever Defend.**

In Witness Whereof, The said party of the first part has hereunto set his hand and seal the day and year first above written.

Signed, Sealed and Delivered in presence of

Len U. Sherwin (Seal)

(Seal)

(Seal)

(Seal)

State of Colorado

PATENT NO. 5611

To all unto Whom these Presents shall Come: Greeting:

Whereas CITY OF STERLING, Colorado of the County of LOGAN and State of Colorado, in accordance with the provisions of the acts of the General Assembly of the State of Colorado approved and in force at the time of the purchase of the land herein designated and described and at the time of the execution of this conveyance has made full payment as appears from the records of the State Board of Land Commissioners of and for the following described real estate, lying and situated in the County of LOGAN and State of Colorado, to-wit:

The South half of the Southwest quarter ($S\frac{1}{2}SW\frac{1}{4}$) of Section Twenty-seven (27), and the Northwest quarter ($NW\frac{1}{4}$) of Section Thirty-four (34), Township Eight (8) North, Range Fifty-two (52) West of the Sixth (6th) Principal Meridian, containing Two Hundred and Forty (240) acres, more or less, according to United States survey. Reserving, however, to the State of Colorado, all rights to any and all minerals, ores and metals of every kind and character and all coal, asphaltum, oil and other like substances in or under said land and the right of ingress and egress for the purpose of mining, together with enough of the surface of same as may be necessary for the proper and convenient working of such minerals and substances.

Subject to any and all easements or rights-of-way heretofore legally obtained and now in full force and effect, if any there be.

which said described tract of land has been purchased by the said CITY OF STERLING, Colorado for the sum of Six Thousand & no/100 ($6,000.00) Dollars.

Now Know Ye, That the State of Colorado in consideration of the premises and in conformity with the Act of the General Assembly in such case provided has sold and granted, and by these presents does sell and grant unto the said CITY OF STERLING, Colorado and to its successors and assigns the said tract above described. To Have and to Hold the same as above specified, together with all the rights, privileges, immunities and appurtenances of whatsoever nature hereunto belonging, unto the said CITY OF STERLING, Colorado and to its successors and assigns forever.

In Testimony Whereof, I Teller Ammons Governor of the State of Colorado have caused these letters to be made Patent, and the Great Seal of the State of Colorado to be hereunto attached.

Given under my Hand at the City of Denver, the twenty-fourth day of November A.D. 1937.

Teller Ammons
Governor.

Attest: George E. Saunders
Secretary of State of the State of Colorado

This Deed, Made this twenty-seventh day of September in the year of our Lord one thousand nine hundred and nineteen between Roland R. Ross

of the County of Logan, and State of Colorado, of the first part, and The City of Sterling, a municipal corporation, organized and existing under the general laws of the State of Colorado,

of the County of Logan, and State of Colorado, of the second part.

Witnesseth, That the said party of the first part, for and in consideration of the sum of Two Thousand Dollars and other good and valuable consideration- Dollars

to the said party of the first part in hand paid by the said party of the second part, the receipt whereof is hereby confessed and acknowledged, has granted, bargained, sold and conveyed, and by these presents does grant, bargain, sell, convey and confirm unto the said party of the second part, its successors ~~heirs~~ and assigns forever, all the following described lot or parcels of land, situate, lying and being in the County of Logan, and State of Colorado, to-wit: all of the North Half (N½) of the South-west Quarter (SW¼) of Section Thirty-four (34) Twp Eight (8) North, Range Fifty-two (52) West of the Sixth Principal Meridian, except that part of the above described land, which is described as follows, to-wit: Beginning at the west quarter corner of Section Thirty-four (34), thence east Five Hundred Seventy-five (575) feet, thence in a south-westerly direction to a point on the south line of said North Half (N½) of the South-west Quarter (SW¼) of Section Thirty-four (34) which is Three Hundred Forty-nine (349) feet east of the west line of said Section Thirty-four (34) thence west Three Hundred Forty-nine (349) feet, more or less to the west line of Section Thirty-four (34) thence north along the west line of Section Thirty-four (34) to the point of beginning, containing fourteen (14) acres, inclusive of roads. Said tract so reserved being otherwise described as all that part of the North Half of the Southwest Quarter of Section thirty-four (34), Township eight (8) North, Range fifty-two (52) West of the 6th Principal Meridian, lying North and West of a line drawn parallel to and eight feet north and west of the City of Sterling's water suction line, where the same is now located across the said North Half of said Southwest Quarter of said Section thirty-four (34).

Together With all and singular the hereditaments and appurtenances thereunto belonging, or any wise appertaining, and the reversion and reversions, remainder and remainders, rents, issues and profits thereof; and all the estate, right, title, interest, claim and demand whatsoever of the said party of the first part, either in law or equity, of, in and to the above bargained premises, with the hereditaments and appurtenances.

To Have and to Hold The said premises above bargained and described, with the appurtenances, unto the said party of the second part, its successors ~~heirs~~ and assigns forever. And the said Roland R. Ross

party of the first part, for his heirs, executors and administrators, does covenant, grant, bargain and agree to and with the said party of the second part, its successors ~~heirs~~ and assigns, that at the time of the ensealing and delivery of these presents is well seized of the premises above conveyed, as of good, sure, perfect, absolute and indefeasible estate of inheritance, in law, in fee simple, and has good right, full power and lawful authority to grant, bargain, sell and convey the same, in manner and form aforesaid, and that the same are free and clear from all former and other grants, bargains, sales, liens, taxes, assessments and incumbrances of whatever kind or nature soever;

and the above bargained premises, in the quiet and peaceable possession of the said party of the second part, its successors ~~heirs~~ and assigns, against all and every person or persons lawfully claiming or to claim the whole or any part thereof, the said party of the first part shall and will **Warrant and Forever Defend.**

In Witness Whereof, The said party of the first part has hereunto set his hand and seal the day and year first above written.

Signed, Sealed and Delivered in presence of

Roland R. Ross. [SEAL]

[SEAL]

[SEAL]

[SEAL]

This Deed, Made this 4th day of December, in the year of our Lord, One Thousand Nine Hundred and Nineteen between **HALEY-HARRIS COMPANY,** a corporation organized under the laws of the State of Wyoming, and duly authorized to do business in the State of Colorado, with its Colorado office at Sterling, Logan County, Colorado, of the first part, and City of Sterling of the County of Logan, and State of Colorado, of the second part, WITNESSETH:

That the said party of the first part, for and in consideration of the sum of - THIRTY-TWO HUNDRED & NO/100 - DOLLARS, to the party of the first part in hand paid by the said party of the second part, the receipt whereof is hereby confessed and acknowledged, has granted, bargained, sold and conveyed, and by these presents does grant, bargain, convey and confirm unto the said party of the second part, its heirs and assigns forever, all of the following described lot or parcel of land situated, lying and being in the County of and State of Colorado, to-wit: The Southeast Quarter ($SE\frac{1}{4}$) of Section Thirty-four (34), Township Eight (8) North, Range Fifty-two (52) West of the 6th Principal Meridian. Subject to any and all rights of way, ditch lines and public roadways as now existing.

TOGETHER with all and singular the hereditaments and appurtenances thereunto belonging, or in anywise appertaining, and the reversion and reversions, remainder and remainders, rents, issues and profits thereof; and all the estate, right, title, interest, claim and demand whatsoever of the said party of the first part, either in law or equity, of, in and to the above bargained premises, with the hereditaments and appurtenances.

TO HAVE AND TO HOLD, The said premises above bargained and described, with the appurtenances, unto the said party of the second part, its successors or ~~heirs and~~ assigns, forever. And the said **HALEY-HARRIS COMPANY,** party of the first part, for itself and its assigns, does covenant, grant bargain and agree to and with the said party of the second part, its successors or ~~heirs and~~ assigns, that at the time of the ensealing and delivery of these presents, it is well seized of the premises above described, as of good, sure, perfect, absolute and indefeasible estate of inheritance, in law, in fee simple, and has good right, full power and lawful authority to grant, bargain, sell and convey the same, in manner and form aforesaid, and that the same are free and clear from all former and other grants, bargains, sales, liens, taxes, assessments, and incumbrances of whatever kind or nature soever, except

and the above bargained premises, in the quiet and peaceable possession of the said party of the second part, its successors or ~~heirs and~~ assigns, against all and every person or persons lawfully claiming or to claim the whole or any part thereof, the said party of the first part shall and will WARRANT AND FOREVER DEFEND.

IN WITNESS WHEREOF, The name of the said Company has been duly subscribed by the Vice-President of the said Corporation, and attested by the Secretary under the corporate seal of the said Company, the day and date first above written.

Haley-Harris Co.

ATTEST: Arthur A. Smith, Secretary.

By William C. Harris, Vice-President.

STATE OF COLORADO, }
COUNTY OF Logan } ss.

I, Glenn Morris, a Notary Public in and for the County and State aforesaid, do hereby certify that WILLIAM C. HARRIS, Vice-President of the **HALEY-HARRIS COMPANY,** a corporation, and also, ARTHUR A. SMITH, Secretary of the said Corporation, personally known to me to be the Vice-President and Secretary of the said Company respectively, and to be the identical persons whose names are subscribed to the foregoing Deed, appeared before me this day in person and acknowledged the execution of the said instrument to be the free and voluntary act of the said Corporation, and to be the free voluntary act of the Vice-President of the said Company, for the uses and purposes therein set forth.

Given under my hand and notarial seal this 4th day of December, A. D. 1919.

My commission expires July 31, 1920

Glenn Morris
Notary Public.

Appendix M

Geotechnical Report

PRELIMINARY GEOTECHNICAL ENGINEERING REPORT

PROPOSED STERLING WATER TREATMENT PLANT
NORTH RIVERVIEW ROAD AND HIGHWAY 6
STERLING, COLORADO

Terracon Project No. 20095015
May 29, 2009

Prepared for:

Richard P. Arber Associates
198 Union Boulevard, Suite 200
Lakewood, Colorado 80228

Attn: Mr. Rob Demis, P.E.

Prepared by:

Terracon Consultants, Inc.
315 North Howes Street
Fort Collins, Colorado 80521
Phone: 303-484-0359
Fax: 303-484-0327

Terracon

May 29, 2009

Richard P. Arber Associates
198 Union Boulevard, Suite 200
Lakewood, Colorado 80228

Attn: Rob Demis, P.E.

Re: Preliminary Geotechnical Engineering Report
Proposed Sterling Water Treatment Plant
North Riverview Road and Highway 6
Sterling, Colorado
Terracon Project No. 20095015

Terracon has completed preliminary geotechnical engineering exploration for the proposed Sterling Water Treatment Plant to be located near Riverview Road North and Highway 6 in Sterling, Colorado. This study was performed in general accordance with our revised proposal number D20090088D dated April 22, 2009.

The results of our engineering study are attached. These results include the Boring Location Map, laboratory test results, Logs of Boring, and the preliminary geotechnical recommendations needed to aid in the design and construction of foundations and other earth connected phases of this project.

Based on the geotechnical engineering analyses, subsurface exploration and laboratory test results, mat foundations helicalare considered acceptable for the support of the proposed structures. Helical piles are considered acceptable to anchor the mat foundation and resist uplift forces due to buoyancy, where construction extends below groundwater. For smaller, lightly loaded structures, the use of spread footing foundations are considered acceptable. Deep foundations may need to be considered if movement must be limited.

Other design and construction recommendations, based upon geotechnical conditions, are presented in the report.

Supplementary geotechnical engineering exploration should be performed at the site when final design plans become available and preliminary design studies are complete. Supplemental geotechnical explorations will be used to confirm or modify the recommendations contained in this preliminary report.

We appreciate being of service to you in the geotechnical engineering phase of this project, and are prepared to assist you during the construction phases as well. Please do not hesitate to contact us if you have any questions concerning this report or any of our testing, inspection, design and consulting services.

Sincerely,
TERRACON CONSULTANTS, INC.

COLORADO REGISTERED
JOELS C. MALAMA
42184
05/29/2009
PROFESSIONAL ENGINEER

Joels C. Malama, P.E.
Department Manager
Geotechnical Services

Christopher M. Gemperline
Staff Geologist
Geotechnical Services

Reviewed by: Andrew Garner, P.E.
Senior Associate

Copies to: Addressee (3)

TABLE OF CONTENTS

Page No.

Letter of Transmittal ii

INTRODUCTION 1
PROJECT INFORMATION 1
SITE EXPLORATION PROCEDURES 2
Field Exploration 2
Laboratory Testing 3
SITE CONDITIONS 3
SUBSURFACE CONDITIONS 4
Soil and Bedrock Conditions 4
Field and Laboratory Test Results 4
Groundwater Conditions 4
PRELIMINARY ENGINEERING RECOMMENDATIONS 4
Geotechnical Considerations 5
Foundation Systems 5
Spread Footings Foundation 5
Mat Foundation 6
Helical Pile Foundations 6
Below Grade Construction 7
Lateral Earth Pressures 8
Seismic Considerations 9
Preliminary Pavement Design and Construction 9
Earthwork 11
General Considerations 11
Site Preparation 11
Subgrade Preparation 12
Fill Materials and Placement 13
Shrinkage 13
Slopes 14
Excavation and Trench Construction 14
Additional Design and Construction Considerations 14
Exterior Slab Design and Construction 14
Underground Utility Systems 15
Corrosion Protection 15
Surface Drainage 15
GENERAL COMMENTS 16

TABLE OF CONTENTS (Cont'd)

Figure No.

BORING LOCATION MAP 1

APPENDIX A: LOGS OF BORING

APPENDIX B: LABORATORY TEST RESULTS

APPENDIX C: GENERAL NOTES

PRELIMINARY GEOTECHNICAL ENGINEERING REPORT

PROPOSED STERLING WATER TREATMENT PLANT
NORTH RIVERVIEW ROAD AND HIGHWAY 6
STERLING, COLORADO

Terracon Project No. 20095015
May 29, 2009

INTRODUCTION

This report contains the results of our preliminary geotechnical engineering exploration for the proposed Sterling water treatment plant project to be located near iverview Road North and Highway 6 in Sterling, Colorado.

The purpose of these services is to provide information and preliminary geotechnical engineering recommendations relative to:

- subsurface soil and bedrock conditions.
- groundwater conditions.
- foundation design and construction.
- basement construction.
- lateral earth pressures.
- floor slab design and construction.
- pavement design and construction.
- septic systems.
- earthwork.
- drainage.

The recommendations contained in this report are based upon the results of field and laboratory testing, engineering analyses, experience with similar subsurface conditions and structures and our understanding of the proposed project.

PROJECT INFORMATION

We understand the project will consist of the construction of a water treatment plant for the City of Sterling. We understand the project will include the construction of 2 buildings totaling 40, 000 square feet. One building will be approximately 5,000 square feet consisting of cast-in-place concrete water holding tanks, with a bottom elevation 5 feet below grade and a CMU superstructure. The second building will be approximately 35,000 square feet consisting of cast-in-place concrete water holding tanks, with a bottom elevation 15 feet below grade and CMU superstructure. We assume that an operations building or other smaller buildings may also be constructed as part of the development.

Site development will include the installation of underground utilities and piping and the construction of accompanying roadways, drives and parking areas.

SITE EXPLORATION PROCEDURES

The scope of the services performed for this project included site reconnaissance by a field engineer a subsurface exploration program, laboratory testing and preliminary engineering analysis.

Field Exploration: Two test borings were drilled on May 14, 2009, to a depth of about 60 feet below existing site grade at the approximate locations shown on the Boring Location Diagram, Figure 1.

The borings were located in the field by measurements from property lines and existing site features. Elevations were taken at each boring location by interpolation from contours indicated on the provided Site Plan. The accuracy of boring locations and elevations should only be assumed to the level implied by the methods used.

The borings were drilled with a CME-55 truck-mounted rotary drill rig with solid-stem augers. Lithologic logs of the borings were recorded by the field engineer during the drilling operations. At selected intervals, relatively undisturbed samples of the subsurface materials were obtained by driving a ring-barrel sampler (RS). Disturbed samples (BS) were obtained from auger cuttings from the pavement boring. Penetration resistance values were recorded in manner similar to the standard penetration test (SPT). This test consists of driving the sampler into the ground with a 140-pound hammer free-falling through a distance of 30 inches. The number of blows required to advance the sampler 12 inches or the interval indicated, is recorded and can be correlated to the standard penetration resistance value (N-value). The blow count values are indicated on the boring logs at the respective sample depths, ring barrel sample blow counts are not considered N-values.

A CME automatic SPT hammer was used to advance the samplers in the borings performed on this site. A greater efficiency is typically achieved with the automatic hammer compared to the conventional safety hammer operated with a cathead and rope. Published correlations between the SPT values and soil properties are based on the lower efficiency cathead and rope method. This higher efficiency affects the standard penetration resistance blow count value by increasing the penetration per hammer blow over what would be obtained using the cathead and rope method. The effect of the automatic hammer's efficiency has been considered in the interpretation and analysis of the subsurface information for this report.

The standard penetration test provides a reasonable indication of the in-place density of sandy type materials, but only provides an indication of the relative stiffness of cohesive materials since the blow count in these soils may be affected by the moisture content of the soil. In addition, considerable care should be exercised in interpreting the N-values in gravelly soils, particularly where the size of the gravel particle exceeds the inside diameter of the sampler.

Groundwater measurements in the borings were recorded at the time of site exploration.

Laboratory Testing: Samples retrieved during the field exploration were returned to the laboratory for observation by the project geotechnical engineer, and were classified in general accordance with the Unified Soil Classification System described in Appendix C. Samples of bedrock were classified in accordance with the general notes for Rock Classification. At that time, an applicable laboratory-testing program was formulated to determine engineering properties of the subsurface materials. Following the completion of the laboratory testing, the field descriptions were confirmed or modified as necessary, and Logs of Borings were prepared. These logs are presented in Appendix A.

Laboratory test results are presented in Appendix B. These results were used for the geotechnical engineering analyses and the development of foundation and earthwork recommendations. Laboratory tests were performed in general accordance with the applicable local or other accepted standards.

Selected soil and bedrock samples were tested for the following engineering properties:

- Water content
- Dry density
- Grain size
- Plasticity Index

SITE CONDITIONS

At the time of field exploration, the site was vacant. The site is triangular shaped and was bounded on the north by a dirt road with a storage rental facility beyond, on the east by an asphalt paved road with a golf club and vacant land beyond, and on the west by a dirt road with a canal and river beyond. Site vegetation consisted of a moderate growth of grass and weeds. Mature cottonwood trees and bushes lined the ditch and the river. The ground surface was generally flat. Site drainage was generally in the form of sheet surficial floor directed to the south and west toward the ditch although shallow depressions existed. The ditch had approximately 2 feet of water flowing at the time of our field exploration. Other site features included an east-west power-line and a concrete pad located near the northwest corner of the site along with concrete debris observed near the middle of the site.

SUBSURFACE CONDITIONS

Soil and Bedrock Conditions: As presented on the Logs of Boring, surface soils encountered in the borings consisted of sand with varying amounts of silt extending to depths of about 59 to 60 feet below existing site grade. Claystone bedrock was encountered in Boring No.1 ata depth of about 59 feet below site grade and extended to the full depth of exploration. Auger refusal was encountered in the test borings due to caving sand.

Field and Laboratory Test Results: Field test results indicate that the sand soils vary from loose to very dense in relative density. The claystone bedrock encountered appeared to be weathered in hardness.

Based on experience, the sand soils encountered on this site are generally considered to be non- to low expansive.

Groundwater Conditions: Groundwater was encountered at a depth of about 12 feet below existing site grade in the test borings at the time of field exploration. These observations represent groundwater conditions at the time of the field exploration, and may not be indicative of other times or at other locations. Groundwater levels can be expected to fluctuate with varying seasonal and weather conditions.

Zones of perched and/or trapped groundwater may also occur at times in the subsurface soils overlying bedrock, on top of the bedrock surface or within permeable fractures in the bedrock materials. The location and amount of perched water is dependent upon several factors including hydrologic conditions, type of site development, irrigation demands on or adjacent to the site, fluctuations in water features, seasonal and weather conditions.

Fluctuations in groundwater levels can best be determined by implementation of a groundwater-monitoring plan. Such a plan would include installation of groundwater-monitoring wells and periodic measurement of groundwater levels over a sufficient period of time. The possibility of groundwater fluctuations should be considered when developing design and construction plans for the project.

PRELIMINARY ENGINEERING RECOMMENDATIONS

The preliminary recommendations presented in this report are based on the assumption that the subsurface conditions do not deviate appreciably from those encountered in the borings. Supplementary geotechnical engineering exploration should be performed at the site upon completion of initial design studies. Supplemental geotechnical explorations will be used to confirm or modify the recommendations contained in this preliminary report.

Geotechnical Considerations: The site appears suitable for the proposed construction. The project is in preliminary planning stages, therefore final site development plans were not available at this time, however, maximum cut and fill depths to bring the site to construction grade are anticipated to be on the order of about 2 to 5 feet.

It is our understanding that portions of the foundations for some structures may be constructed below maximum anticipated groundwater elevation. Particular attention will be required in the design and construction of the foundations and structures due to the relatively shallow groundwater. Shallow foundations are generally considered acceptable on the site, provided some foundation movement can be tolerated. The use of spread footings may be considered for smaller, lightly loaded structures. Mat foundations can also be considered for larger structures and tanks. Mat foundations constructed below groundwater elevation will need to be designed for buoyancy forces. We understand that helical piles are preferred to resist these uplift forces. Deep foundations could also be considered for structures where very little movement can be tolerated. We are available to discuss these foundations with you. Supplemental geotechnical explorations will be required to confirm or modify the recommendations contained in this letter and the preliminary geotechnical engineering report.

Preliminary design criteria for the recommended mat foundations and helical piles are outlined below.

Foundation Systems: As discussed, shallow foundations systems such as spread footings and mat foundations are considered acceptable for support of structures on the site, provided some movement can be tolerated. We understand that helical piles are being considered to resist potential buoyancy forces on mat foundations below groundwater elevation. Similar deep foundation systems may also be considered for support of structures where very little movement can be tolerated. We are available to discuss these alternatives with you.

Design of individual structures on the site should be based on supplemental geotechnical exploration for each structure. Supplemental exploration and analyses should be undertaken in order to develop final design parameters and to confirm and/or modify the preliminary recommendations and conclusions contained in this report.

Spread Footings: Due to the presence of non- to low swelling soils on the site, spread footing foundations bearing upon undisturbed subsoils, recompacted native soils and/or engineered fill are recommended for support of the proposed structure. The footings may be designed for a maximum bearing pressure of 1,500 to 2,000 pounds per square foot (psf).

The design bearing pressure applies to dead loads plus design live load conditions. The design bearing pressure may be increased by 1/3 when considering total loads that include wind or seismic conditions.

Exterior footings should be placed a minimum of 36 inches below finished grade for frost protection and to provide confinement for the bearing soils. Interior footings should bear a minimum of 12 inches below finished grade. Finished grade is the lowest adjacent grade for perimeter footings and floor level for interior footings.

Footings should be proportioned on the basis of relative constant dead load pressure in order to reduce differential settlement between adjacent footings. Total settlement resulting from the assumed structural loads is estimated to be on the order of 1 to 2 inches. Differential settlement should be on the order of 1/2 to 3/4 of the estimated total settlement. Additional foundation movements could occur if water from any source infiltrates the foundation soils; therefore, proper drainage should be provided in the final design and during construction.

Areas of low density soils may be encountered at foundation bearing depth. When such conditions exist beneath planned foundation areas, the subgrade soils should be removed to a minimum depth of 18 inches and a minimum of 18 inches horizontally beyond the edge of footings. The soils should be replaced as engineered fill, conditioned to near optimum moisture content and compacted.

Mat Foundations: As discussed, consideration is being given to supporting the proposed buildings on mat foundationss. Mat foundations are considered applicable for when bearing on the natural granular soils or engineered fill. A mat foundation may be designed for any practical bearing pressure up to a maximum of 1,500 to 2,000 pounds per square foot (psf). Total settlement of mat foundations designed to the maximum bearing pressure is estimated to be on the order of 1 to 3 inches.

For structural design of mat foundations, a modulus of subgrade reaction of 30 to 90 pounds per cubic inch (pci) is anticipated when bearing on the existing granular soils above the water level. These values should be reduced to about 35 to 55 (pci) when bearing on the existing granular soils below the water level.

Helical Pile Foundations: As discussed, we understand that helical piles are being considered in conjunction with the mat foundation to resist uplift forces due to buoyancy. These piles could also be used to limit settlement of the mat, if required. Axial, end-bearing capacities are estimated to be on the order of 2,000 to 3,500 pounds per square foot (psf) for design of the helices. To develop resistance to uplift capacity, we estimate that the piles will need to be drilled into the medium dense sands at least 20 feet below existing site grade. The magnitude of buoyancy forces will be dependent on the depth of the foundation below groundwater with allowance for structural dead loads. Pullout capacity will be dependent on helix size and embedment into the medium dense soils. Actual capacity should be based on load tests performed within the area of each structure.

The soil mass providing uplift resistance for the foundation should be calculated as the zone contained within planes that extend up and out from the edges of the helices to the ground surface at an angle of approximately 30 degrees from vertical. The ultimate uplift capacity should then be taken as the sum of the weight of soil in this zone. Effective unit weights for the soil will range from 100 to 110 pcf for soil above ground water and 40 to 50 pcf below groundwater. The ultimate combined uplift capacity should then be divided by a factor of safety of at least 3.0 to obtain the allowable uplift capacity.

We do not recommend using vertically installed helical piles to resist lateral loads without approved lateral load test data, as these types of foundations are typically designed to resist axial loads, exclusively (compression and tension loads). Helical piles installed at a batter may be used to resist lateral loads. Typically, helical piers can be installed to a batter of up to 45 degrees to the horizontal. Only the horizontal component of the allowable axial load should be considered to resist the lateral loading and only in the direction of the batter.

The foundation contractor or structural engineer should design the foundation system to accommodate the loads of the structure based on the structural engineer's load design calculations. The foundation elements should extend into the underlying native sand soils sufficiently to achieve the support required for the proposed loads. The actual design of the piers including the pier capacity, spacing, helix diameter(s) if applicable, shaft length, bracket attachment and configuration, and shaft diameter should be performed by a licensed structural engineer.

Terracon should be consulted to review the foundation design, and a representative of this firm should be present to observe installation to verify that design parameters such as torque and length are met during installation.

Below-Grade Construction: Groundwater was encountered at a depth of about 12 feet below existing site grade in the test borings at the time of field exploration. It is our understanding that portions of the foundations for some structures may be constructed below maximum anticipated groundwater elevation. Below-grade construction is considered feasible on the site provided that foundation subgrade is approximately 3 to 5 feet above groundwater elevation. In areas where below-grade construction will be below anticipated groundwater table, design should include permanent dewatering systems or be designed for hydrostatic and buoyancy forces

To reduce the potential for groundwater to enter the below-grade portions of the structures, the structures should be water-tight or installation of a permanent dewatering system is recommended. The dewatering system would, at a minimum, include an underslab gravel drainage layer sloped to an interior perimeter drainage system.

The drainage system should consist of a properly sized, perforated pipe that is embedded in free-draining gravel and placed in a trench at least 12 inches in width. The trench should be inset from the interior edge of the nearest foundation a minimum of 12 inches. In addition, the

trench should be located such that an imaginary line extending downward at a 45-degree angle from the foundation does not intersect the nearest edge of the trench. Gravel should extend a minimum of 3 inches beneath the bottom of the pipe. The drainage system should be sloped at a minimum 1/8 inch per foot to a suitable outlet, such as a sump and pump system.

The underslab drainage layer should consist of a minimum 6-inch thickness of free-draining gravel meeting the specifications of ASTM C33, Size No. 57 or 67. Cross-connecting drainage pipes should be provided beneath the slab at 6-foot intervals and should discharge to the perimeter drainage system.

Sizing of drainage pipe will be dependent upon groundwater flow into the dewatering system. Groundwater flow rates will fluctuate with permeability of the soils/bedrock to be dewatered and the depth to which groundwater may rise in the future. Pump tests to determine groundwater flow rates are recommended in order to properly design the system.

Water stop is recommended at the junction of below-grade slabs and foundation walls, or at other locations where groundwater could enter the below-grade structure should it rise above present level. Consideration should also be given to including hydrostatic relief valves in the below-grade slab.

Should the below-grade structure be constructed to any significant depth below groundwater level, consideration should be given to including vertical drainage against foundation walls to reduce hydrostatic forces. Use of drainage media discharging to the foundation dewatering system is recommended.

Lateral Earth Pressures: For the on-site sand soils above any free water surface, recommended equivalent fluid pressures for preliminary design of foundation elements or other retaining walls are:

- Active (free to deflect laterally) ..... 35 to 45 psf/ft
- At rest (restrained from lateral movement) ..... 55 to 65 psf/ft
- Passive (free to deflect laterally) ..... 400 to 450 psf/ft
- Coefficient of base friction ..... 0.35 to 0.45

For soils in submerged conditions, recommended equivalent fluid pressures are:

- Active (free to deflect laterally) ..... 75 to 85 psf/ft
- At rest (restrained from lateral movement) ..... 85 to 95 psf/ft

The lateral earth pressures herein do not include any factor of safety. Fill against grade beams and retaining walls should be compacted to densities specified in the "Earthwork" section of this report. Compaction of each lift adjacent to walls should be accomplished with hand-operated

tampers or other lightweight compactors. Overcompaction may cause excessive lateral earth pressures that could result in wall movement.

Seismic Considerations: A site classification "D" should be used for the design of structures for the proposed project (2006 International Building Code, Table No. 1613.5.2).

Preliminary Pavement Design and Construction: Preliminary design of privately maintained pavements for the project has been based on the procedures outlined by the Asphalt Institute and the American Concrete Institute. The design presented herein is for preliminary planning purposes for the project. Subsequent to final grading, a final pavement design will need to be prepared for submittal. If improvements to public roadways are anticipated, a pavement design report meeting the Town of Sterling specifications will need to be prepared for submittal, subsequent to final grading.

For preliminary flexible pavement thickness design, we assumed the following parameters for Asphalt Institute design:

- Automobile Parking Areas
  Parking stalls and parking lots for cars and pick-up trucks, up to 200 stalls
- Main Traffic Corridors
  Parking lots with a maximum of 20 trucks per day

For preliminary rigid pavement thickness design, we assumed the following design parameters for ACI based upon the average daily truck traffic (ADTT):

- Automobile Parking Areas
  ACI Category A-1: Automobile parking with an ADTT of 1 over 20 years
- Main Traffic Corridors
  ACI Category B: Commercial entrance and service lanes with an ADTT of 25 over 20 years
- Concrete modulus of rupture value of 600 psi

We should be contacted to confirm and/or modify the recommendations contained herein if actual traffic volumes differ from the assumed values shown above.

Preliminary alternatives for flexible and rigid pavements sections are summarized below for each traffic area and are presented for planning purposes only:

Traffic Area	Alternative	Preliminary Pavement Thickness (inches)			
		Asphalt Concrete Surface	Aggregate Base Course	Portland Cement Concrete	Total
Automobile Parking	A	5 to 6-1/2			5 to 6-1/2
	B	3-1/2 to 4	7 to 8-1/2		10-1/2 to 12-1/2
	C			5 to 6	5 to 6
Main Traffic Corridors	A	7-1/2 to 8-1/2			7-1/2 to 8-1/2
	B	4-1/2 to 5	10 to 12		14-1/2 to 17
	C			6 to 7	6 to 7

Final pavement design should be completed with supplemental geotechnical exploration to confirm or modify the preliminary pavement thickness alternatives. The final design will account for variations in the pavement subgrade soils within paved areas. Accordingly, the actual thickness may vary from those outlined above.

The placement of a partial pavement thickness for use during construction is not suggested without a detailed pavement analysis incorporating construction traffic. In addition, we should be contacted to confirm the traffic assumptions outlined above. If the actual traffic varies from the assumptions outlined above, modification of the pavement section thickness will be required.
For preliminary analysis of pavement costs, the following specifications should be considered for each pavement component:

Pavement Component	Colorado Department of Transportation Criteria
Asphalt concrete Surface	Grading S or SX
Aggregate Base Course	Class 5 or 6
Portland Cement Concrete	Class P

Future performance of pavements constructed at this site will be dependent upon several factors, including:

- maintaining stable moisture content of the subgrade soils; and
- providing for a planned program of preventative maintenance.

The performance of all pavements can be enhanced by minimizing excess moisture which can reach the subgrade soils. The following recommendations should be considered at minimum:

- site grading at a minimum 2 percent grade away from the pavements.

- the subgrade and the pavement surface have a minimum 1/4 inch per foot slope to promote proper surface drainage.
- consider appropriate edge drainage and pavement underdrain systems.
- install pavement drainage surrounding areas anticipated for frequent wetting (e.g., garden centers, wash racks).
- install joint sealant and seal cracks immediately.
- compaction of any utility trenches for landscaped areas to the same criteria as the pavement subgrade.
- seal all landscaped areas in or adjacent to pavements to minimize or prevent moisture migration to subgrade soils.
- place compacted, low permeability backfill against the exterior side of curb and gutter.
- place curb, gutter and/or sidewalk directly on subgrade soils without the use of base course materials.

Earthwork:

General Considerations: The following presents recommendations for site preparation, excavation, subgrade preparation and placement of engineered fills on the project.

All earthwork on the project should be observed and evaluated by Terracon. The evaluation of earthwork should include observation and testing of engineered fills, subgrade preparation, foundation bearing soils and other geotechnical conditions exposed during the construction of the project.

Site Preparation: Strip and remove existing vegetation, debris, and other deleterious materials from proposed building and pavement areas. All exposed surfaces should be free of mounds and depressions which could prevent uniform compaction.

Stripped materials consisting of vegetation and organic materials should be wasted from the site or used to revegetate landscaped areas or exposed slopes after completion of grading operations. If it is necessary to dispose of organic materials on-site, they should be placed in non-structural areas and in fill sections not exceeding 5 feet in height.

The site should be initially graded to create a relatively level surface to receive fill and to provide for a relatively uniform thickness of fill beneath proposed structures. If fill is placed in areas of the site where existing slopes are steeper than 5:1 (horizontal:vertical), the area should be benched to reduce the potential for slippage between existing slopes and fills. Benches should be wide enough to accommodate compaction and earth moving equipment and to allow placement of horizontal lifts of fill.

All exposed areas which will receive fill, once properly cleared and benched, should be scarified to a minimum depth of 8 inches, conditioned to near optimum moisture content and compacted.

Although evidence of very soft or very loose fills or underground facilities such as septic tanks, cesspools, basements and utilities was not observed during the site reconnaissance, such features could be encountered during construction. If unexpected fills or underground facilities are encountered, such features should be removed and the excavation thoroughly cleaned prior to backfill placement and/or construction.

It is anticipated that excavations for the proposed construction can be accomplished with conventional earthmoving equipment. However, depending upon depth of excavation and seasonal conditions, groundwater may be encountered in excavations on the site. Pumping from sumps may be utilized to control water within excavations. Well points may be required for significant groundwater flow, or where excavations penetrate groundwater to a significant depth.

The stability of the subgrade may be affected by proximity to existing drainage, depth of groundwater, precipitation, repetitive construction traffic or other factors. If unstable conditions are encountered or develop during construction, workability may be improved by scarifying and drying. Overexcavation of wet zones and replacement with granular materials may be necessary. Use of lime, fly ash, kiln dust, cement or geotextiles could also be considered as a stabilization technique. Laboratory evaluation is recommended to determine the effect of chemical stabilization on subgrade soils prior to construction. Lightweight excavation equipment may be required to reduce subgrade pumping.

The individual contractor(s) is responsible for designing and constructing stable, temporary excavations as required to maintain stability of both the excavation sides and bottom. All excavations should be sloped or shored in the interest of safety following local and federal regulations, including current OSHA excavation and trench safety standards.

Subgrade Preparation: Subgrade soils beneath interior and exterior slabs and beneath pavements should be scarified, moisture conditioned and compacted to a minimum depth of 8 inches. The moisture content and compaction of subgrade soils should be maintained until slab or pavement construction.

Areas of soft or loose soils may be encountered at foundation bearing depth after excavation is completed for footings. When such conditions exist beneath planned footing areas, the subgrade soils should be removed, replaced, and/or recompacted prior to placement of the foundation system.

Fill Materials and Placement: Clean on-site soils or approved imported materials may be used as fill material. Imported soils (if required) should conform to the following:

Gradation	**Percent finer by weight (ASTM C136)**
6"	100
3"	70-100
No. 4 Sieve	50-100
No. 200 Sieve	35 (max)

- Liquid Limit ..... 30 (max)
- Plasticity Index ..... 15 (max)
- Maximum expansive potential (%)* 1.0

*Measured on a sample compacted to approximately 95 percent of the ASTM D698 maximum dry density at about optimum water content. The sample is confined under a 500 psf surcharge and submerged.

Engineered fill should be placed and compacted in horizontal lifts, using equipment and procedures that will produce recommended moisture contents and densities throughout the lift. Recommended compaction criteria for engineered fill is 95 percent of the maximum dry density (ASTM D698). Engineered fill beneath foundations should be compacted to a minimum of 98 percent of standard Proctor dry density.

On-site sands and/or imported soils should be compacted within a moisture range of 3 percent below to 3 percent above optimum unless modified by the project geotechnical engineer.

The recommendations for placement and compaction criteria presented assume that fill depths will be less than 8 feet. Fills less than 8 feet, when placed and compacted as recommended in this report, will experience some settlement (generally 1 inch or less). The amount and rate of settlement will be increased if water is introduced into the fill.

If fill depths exceed 8 feet, modifications to the backfill materials, placement and compaction criteria may be required or appreciable settlement may occur. The final grading plans should be reviewed with Terracon where fill depths of 8 feet or more are proposed.

Shrinkage: For balancing grading plans, the estimated shrink or swell of soils and bedrock when used as compacted fill following recommendations in this report are as follows:

Estimated Shrink (-) Swell (+)

Material	**Based on ASTM D698**
On-site sand soils:	-5 to -15%

Slopes: For permanent slopes in compacted fill areas, recommended maximum configurations for on-site materials are as follows:

Material	**Maximum Slope Horizontal:Vertical**
Cohesionless soils (on-site sands and imported soils)	2-1/2:1

If steeper slopes are required for site development, stability analyses should be completed to design the grading plan.

The face of all slopes should be compacted to the minimum specification for fill embankments. Alternately, fill slopes can be overbuilt and trimmed to compacted material.

Excavation and Trench Construction: Excavations into the on-site soils will encounter caving soils and possibly groundwater, depending upon the final depth of excavation. The individual contractor(s) should be made responsible for designing and constructing stable, temporary excavations as required to maintain stability of both the excavation sides and bottom. All excavations should be sloped or shored in the interest of safety following local and federal regulations, including current OSHA excavation and trench safety standards.

The soils to be penetrated by the proposed excavations may vary significantly across the site. The preliminary soil classifications are based solely on the materials encountered in widely spaced exploratory test borings. The contractor should verify that similar conditions exist throughout the proposed area of excavation. If different subsurface conditions are encountered at the time of construction, the actual conditions should be evaluated to determine any excavation modifications necessary to maintain safe conditions.

As a safety measure, it is recommended that all vehicles and soil piles be kept to a minimum lateral distance from the crest of the slope equal to no less than the slope height. The exposed slope face should be protected against the elements.

Additional Design and Construction Considerations:

Exterior Slab Design and Construction: Exterior slabs-on-grade, exterior architectural features, and utilities founded on or in backfill may experience some movement due to the volume change of the backfill. Potential movement could be reduced by:

- minimizing moisture increases in the backfill.

- controlling moisture-density during placement of backfill.
- using designs which allow vertical movement between the exterior features and adjoining structural elements.
- placing effective control joints on relatively close centers.

Underground Utility Systems: Piping should be adequately bedded for proper load distribution. It is suggested that clean, graded gravel compacted to 75 percent of relative density ASTM D4253 be used as bedding. Underground piping within or near the proposed structure should be designed with flexible couplings, so minor deviations in alignment do not result in breakage or distress. Utility knockouts in grade beams should be oversized to accommodate differential movements.

It is strongly recommended that a representative of the geotechnical engineer provide full-time observation and compaction testing of trench backfill within building and pavement areas.

Corrosion Protection: Based on our experience with similar soils types in the area, ASTM Type I Portland cement is suitable for all project concrete on and below grade. However, if there is no (or minimal) cost differential, use of ASTM Type II Portland cement is recommended for additional sulfate resistance of construction concrete. Foundation concrete should be designed in accordance with the provisions of Section 318, Chapter 4, of the *ACI Design Manual*.

Surface Drainage: All grades must be adjusted to provide positive drainage away from the structures during construction and maintained throughout the life of the proposed project. Infiltration of water into utility or foundation excavations must be prevented during construction. Landscaped irrigation adjacent to the foundation systems should be minimized or eliminated. Water permitted to pond near or adjacent to the perimeter of the structures (either during or post-construction) can result in significantly higher soil movements than those discussed in this report. As a result, any estimations of potential movement described in this report cannot be relied upon if positive drainage is not obtained and maintained, and water is allowed to infiltrate the fill and/or subgrade.

Exposed ground should be sloped at a minimum of 10 percent grade for at least 5 to 10 feet beyond the perimeter of the buildings, where possible. The use of drainage swales, sidewalk chases, and/or area drains may be required to facilitate drainage. Backfill against footings, exterior walls and in utility and sprinkler line trenches should be well compacted and free of all construction debris to reduce the possibility of moisture infiltration. After building construction and prior to project completion, we recommend that verification of final grading be performed to document that positive drainage, as described above, has been achieved.

Flatwork and pavements will be subject to post construction movement. Maximum grades practical should be used for paving and flatwork to prevent areas where water can pond. In addition, allowances in final grades should take into consideration post-construction movement of flatwork, particularly if such movement would be critical. Where paving or flatwork abuts the structure, care should be taken that joints are properly sealed and maintained to prevent the infiltration of surface water.

Planters located adjacent to the structures should preferably be self-contained. Sprinkler mains and spray heads should be located a minimum of 10 feet away from the buildings. Roof drains should discharge on pavements or be extended away from the structure a minimum of 10 feet through the use of splash blocks or downspout extensions. A preferred alternative is to have the roof drains discharge to storm sewers by solid pipe or daylighted to a detention pond or other appropriate outfall.

GENERAL COMMENTS

Supplemental exploration and analyses should be undertaken in order to develop final design parameters and to confirm and/or modify the preliminary recommendations and conclusions contained in this report.

Terracon should be retained to review the final design plans and specifications so comments can be made regarding interpretation and implementation of our geotechnical recommendations in the design and specifications. Terracon should also be retained to provide testing and observation during the excavation, grading, foundation and construction phases of the project.

The analysis and recommendations presented in this preliminary report are based upon the data obtained from the borings performed at the indicated locations and from other information discussed in this report. This report does not reflect variations that may occur between borings, across the site, or due to the modifying effects of weather. The nature and extent of such variations may not become evident until during or after construction. If variations appear, we should be immediately notified so that further evaluation and supplemental recommendations can be provided.

The scope of services for this project does not include, either specifically or by implication, any environmental or biological (e.g., mold, fungi, bacteria) assessment of the site or identification or prevention of pollutants, hazardous materials or conditions. If the owner is concerned about the potential for such contamination or pollution, other studies should be undertaken.

This preliminary report has been prepared for the exclusive use of our client for specific application to the project discussed and has been prepared in accordance with generally accepted geotechnical engineering practices. No warranties, either express or implied, are intended or made. Site safety, excavation support, and dewatering requirements are the responsibility of others. In the event that changes are planned in the nature, design, or location

of the project as outlined in this report, the conclusions and recommendations contained in this report shall not be considered valid unless Terracon reviews the changes, and either verifies or modifies the conclusions of this report in writing.

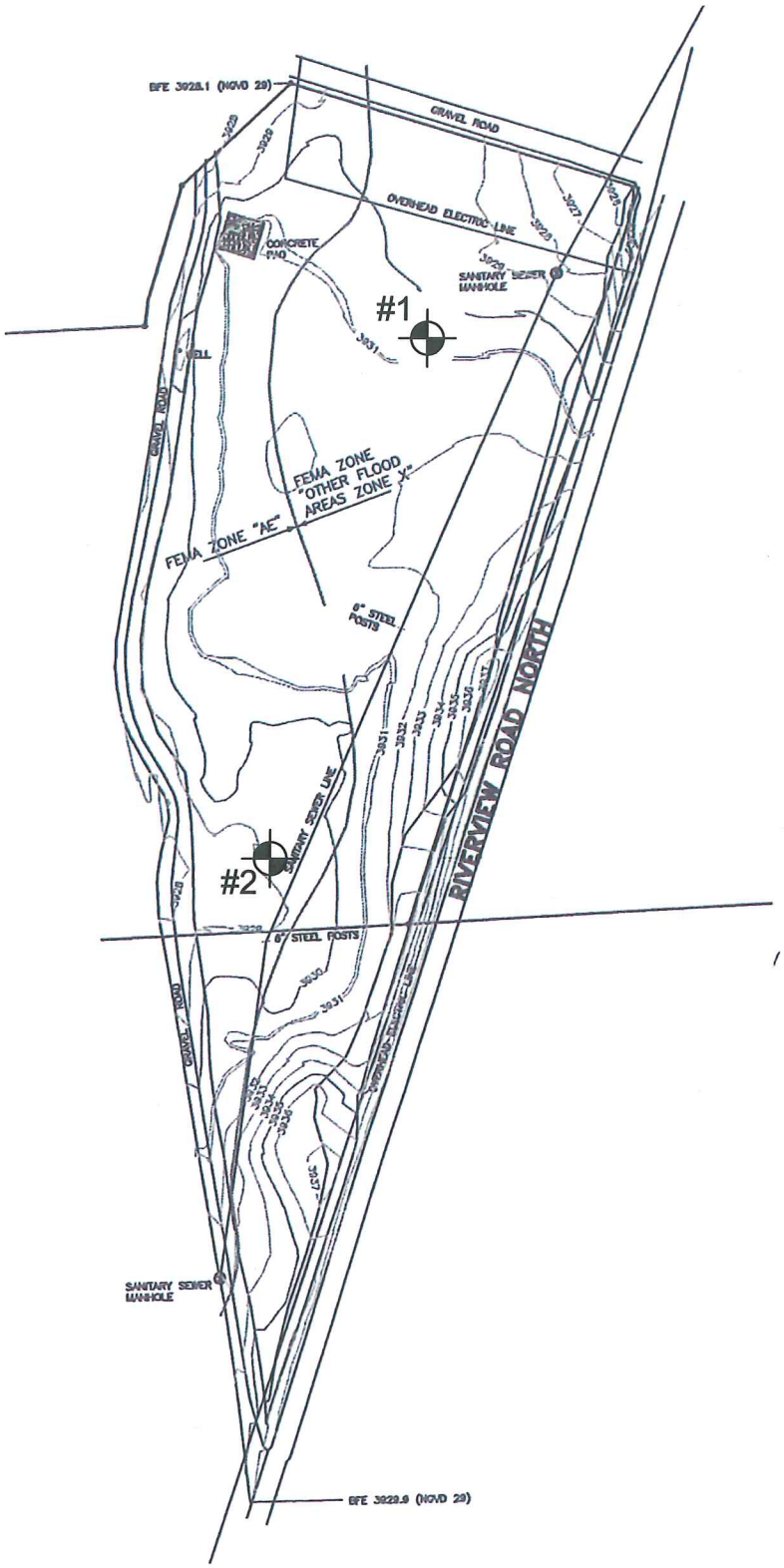

N

LEGEND
- APPROXIMATE TEST BORING LOCATIONS

Project Mngr: CMG	Project No. 20095015	Terracon Consulting Engineers and Scientists	FIGURE 1: BORING LOCATION DIAGRAM	FIG. No.
Drawn By: DJS	Scale: 1"=200'	301 N. HOWES FORT COLLINS, CO 80521	PROPOSED STERLING WATER TREATMENT PLANT	1
Checked By: JM	Date: 05/21/09	PH. (970) 484-0359 FAX. (970) 484-0454	STERLING, COLORADO	
Approved By: JM			File No. N:\Projects\2009\20095015\Cadd\20095015-1.dwg	

APPENDIX A

LOGS OF BORINGS

LOG OF BORING NO. 1

CLIENT **Richard P Arber Associates**

SITE **North Riverview Road and Highway 6 Sterling, Colorado**

PROJECT **Proposed Water Treatment Plant**

Approx. Boring Location: north portion of the site

Approx. Surface Elev.: 3030.5 ft

GRAPHIC LOG	DESCRIPTION	DEPTH, ft.	USCS SYMBOL	SAMPLES NUMBER	TYPE	RECOVERY, in.	BLOWS / ft.	TESTS WATER CONTENT, %	DRY UNIT WT pcf	UNCONFINED STRENGTH, psf
	POORLY GRADED SAND WITH SILT Loose to medium dense, tan brown, fine to medium grained									
		5	SM	1	SS	12	9	4		
		10	SM	2	SS	12	14	8		
	∇ 14 / 3016.5									
	POORLY GRADED SAND Medium dense to very dense, tan brown, fine to medium grained	15	SP	3	SS	12	15	4		
		20	SP	4	SS	12	22			
		25								
		30	SP	5	SS	12	18	11		
		35								
		40	SP	6	SS	12	50/0.7			
		45								
		50								
		55								
	60 / 2970.5	60	SP	7	SS	12	50/0.8	13		
	AUGER REFUSAL									

The stratification lines represent the approximate boundary lines between soil and rock types: in-situ, the transition may be gradual.

*Auger refusal due to caving sands

WATER LEVEL OBSERVATIONS, ft			
WL	∇ 12	WD	▼
WL	▼		▼
WL	Initial Water Level Reading		

Terracon

BORING STARTED	5-14-09		
BORING COMPLETED	5-14-09		
RIG	CME55	FOREMAN	CMG
LOGGED	CMG	JOB #	20095015

LOG OF BORING NO. 2

CLIENT **Richard P Arber Associates**

SITE **North Riverview Road and Highway 6 Sterling, Colorado**

PROJECT **Proposed Water Treatment Plant**

Approx. Boring Location: north portion of the site

Approx. Surface Elev.: 3029 ft

GRAPHIC LOG	DESCRIPTION	DEPTH, ft.	USCS SYMBOL	SAMPLES NUMBER	TYPE	RECOVERY, in.	BLOWS / ft.	TESTS WATER CONTENT, %	DRY UNIT WT pcf	UNCONFINED STRENGTH, psf
	SILTY SAND Medium dense, tan, fine to medium grained		SM	1	SS	12	17	8		
		5	SM	2	SS	12	10	8		
		10	SM	3	SS	12	15			
	14 / 3015									
	POORLY GRADED SAND Medium dense to dense, tan brown, fine to medium grained	15	SP	4	SS	12	15			
		20	SP	5	SS	12	21			
		25								
		30	SP	6	SS	12	16			
		35								
		40	SP	7	SS	12	38			
		45								
		50								
		55								
	59 / 2970									
	60 / 2969 **CLAYSTONE** Weathered, tan	60		8	BS	12		30		
	AUGER REFUSAL									

The stratification lines represent the approximate boundary lines between soil and rock types: in-situ, the transition may be gradual.

*Auger refusal due to caving sands

WATER LEVEL OBSERVATIONS, ft			
WL	▽ 12	WD	▼
WL	▼		▼
WL	Initial Water Level Reading		

Terracon

BORING STARTED	5-14-09		
BORING COMPLETED	5-14-09		
RIG	CME55	FOREMAN	CMG
LOGGED	CMG	JOB #	20095015

APPENDIX B

LABORATORY TEST RESULTS
SUMMARY TABLES

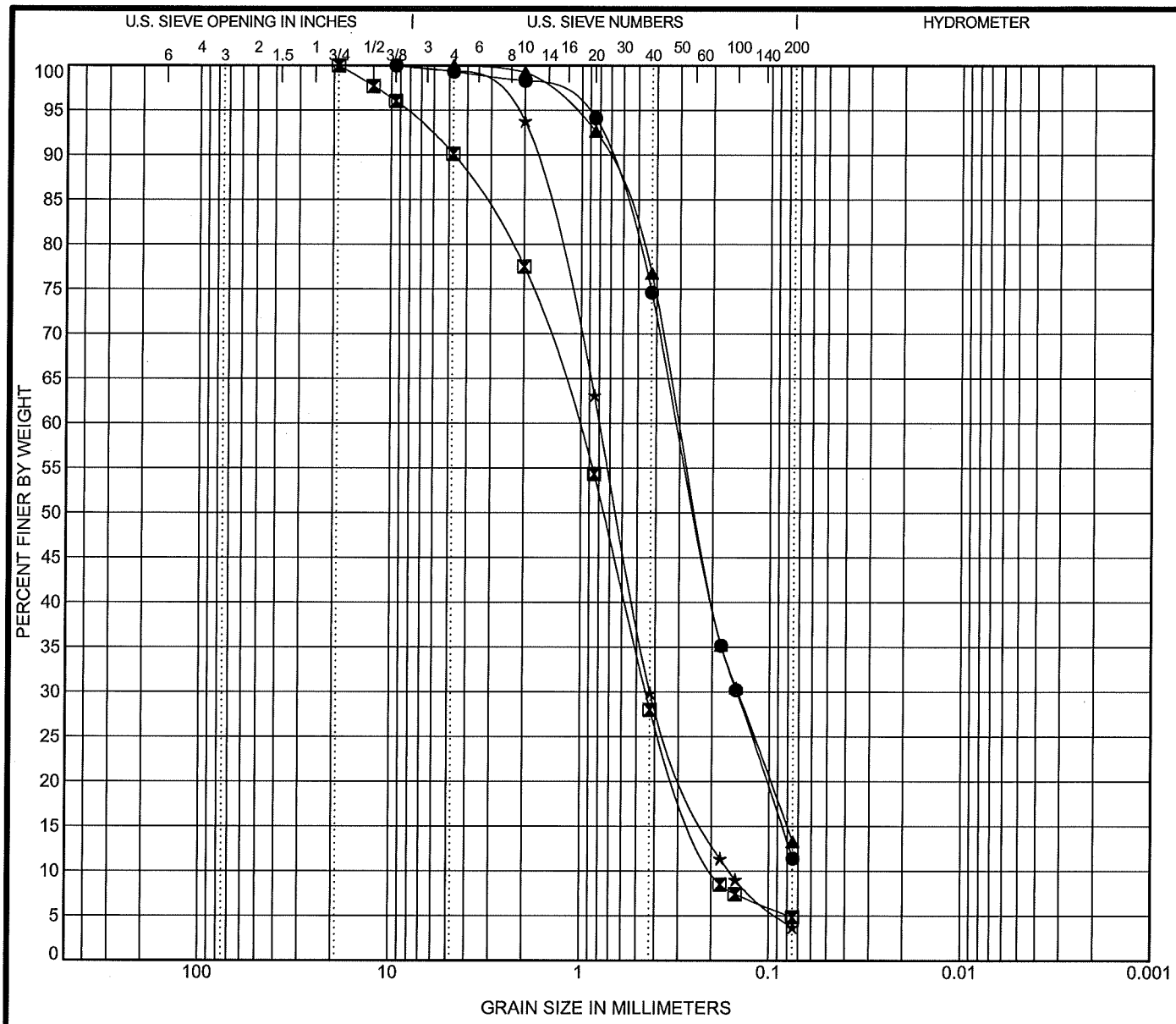

COBBLES	GRAVEL		SAND			SILT OR CLAY
	coarse	fine	coarse	medium	fine	

	Specimen Identification			Classification	LL	PL	PI	Cc	Cu
●	1	9.0ft		**POORLY GRADED SAND with SILT(SP-SM)**	**NP**	**NP**	**NP**	**1.01**	**4.34**
⊠	1	59.0ft		**POORLY GRADED SAND(SP)**	**NP**	**NP**	**NP**	**0.99**	**5.45**
▲	2	9.0ft		**SILTY SAND(SM)**	**NP**	**NP**	**NP**		
★	2	29.0ft		**POORLY GRADED SAND(SP)**				**1.41**	**4.92**

	Specimen Identification			D100	D60	D30	D10	%Gravel	%Sand	%Silt	%Clay
●	1	9.0ft		**9.5**	**0.309**	**0.149**		**0.7**	**87.9**	**11.4**	
⊠	1	59.0ft		**19**	**1.048**	**0.448**	**0.192**	**9.9**	**85.3**	**4.8**	
▲	2	9.0ft		**4.75**	**0.301**	**0.147**		**0.0**	**86.7**	**13.3**	
★	2	29.0ft		**9.5**	**0.797**	**0.426**	**0.162**	**0.6**	**95.7**	**3.7**	

Terracon

GRAIN SIZE DISTRIBUTION

Project: Proposed Water Treatment Plant
Site: North Riverview Road and Highway 6 Sterling, Colorado
Job #: 20095015
Date:

TC GRAIN SIZE 20095015.GPJ FORT COLLINS 110308.GDT 5/29/09

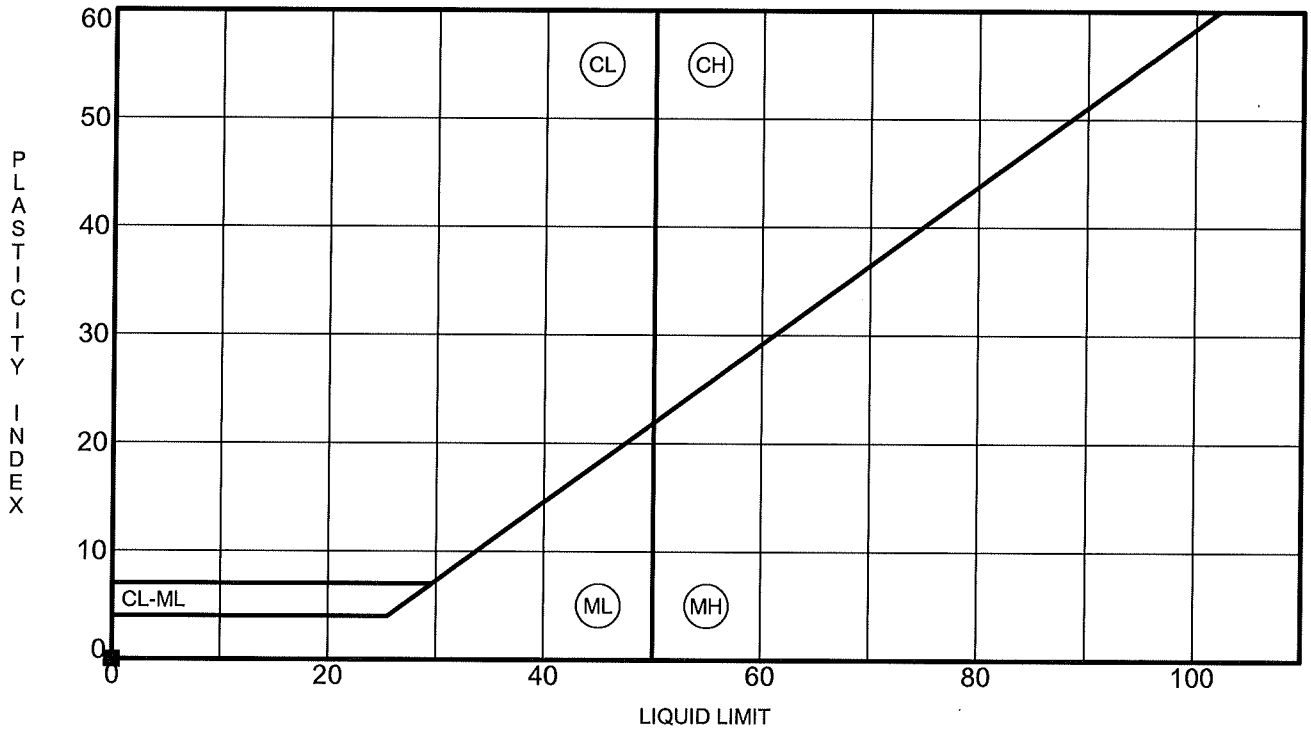

	Specimen Identification		LL	PL	PI	%Fines	Classification
●	1	9.0ft	NP	NP	NP	11	POORLY GRADED SAND with SILT(SP-SM)
⊠	1	59.0ft	NP	NP	NP	5	POORLY GRADED SAND(SP)
▲	2	9.0ft	NP	NP	NP	13	SILTY SAND(SM)

Terracon

ATTERBERG LIMITS RESULTS

Project: Proposed Water Treatment Plant
Site: North Riverview Road and Highway 6 Sterling, Colorado
Job #: 20095015
Date:

Borehole	Depth ft	Liquid Limit	Plasticity Index	% <#200 Sieve	Water Soluble Sulfates (ppm)	AASHTO Class-ification	USCS Class-ification	Water Content (%)	Dry Unit Weight (pcf)	Swell (%)/ Surcharge (psf)	
1	4.0							4			
1	9.0	NP	0	11		A-2-4	SP-SM	8			
1	14.0							4			
1	29.0							11			
1	59.0	NP	0	5		A-1-b	SP	13			
2	0.5							8			
2	4.0							8			
2	9.0	NP	0	13		A-2-4	SM				
2	29.0			4			SP				
2	59.0							30			

Terracon

SUMMARY OF LABORATORY RESULTS

Project: Proposed Water Treatment Plant
Site: North Riverview Road and Highway 6 Sterling, Colorado
Job #: 20095015
Date:

APPENDIX C

GENERAL NOTES

GENERAL NOTES

DRILLING & SAMPLING SYMBOLS:

SS:	Split Spoon - 1-3/8" I.D., 2" O.D., unless otherwise noted	HS:	Hollow Stem Auger
ST:	Thin-Walled Tube - 2" O.D., unless otherwise noted	PA:	Power Auger
RS:	Ring Sampler - 2.42" I.D., 3" O.D., unless otherwise noted	HA:	Hand Auger
DB:	Diamond Bit Coring - 4", N, B	RB:	Rock Bit
BS:	Bulk Sample or Auger Sample	WB:	Wash Boring or Mud Rotary

The number of blows required to advance a standard 2-inch O.D. split-spoon sampler (SS) the last 12 inches of the total 18-inch penetration with a 140-pound hammer falling 30 inches is considered the "Standard Penetration" or "N-value". For 3" O.D. ring samplers (RS) the penetration value is reported as the number of blows required to advance the sampler 12 inches using a 140-pound hammer falling 30 inches, reported as "blows per foot," and is not considered equivalent to the "Standard Penetration" or "N-value".

WATER LEVEL MEASUREMENT SYMBOLS:

WL:	Water Level	WS:	While Sampling
WCI:	Wet Cave in	WD:	While Drilling
DCI:	Dry Cave in	BCR:	Before Casing Removal
AB:	After Boring	ACR:	After Casing Removal

Water levels indicated on the boring logs are the levels measured in the borings at the times indicated. Groundwater levels at other times and other locations across the site could vary. In pervious soils, the indicated levels may reflect the location of groundwater. In low permeability soils, the accurate determination of groundwater levels may not be possible with only short-term observations.

DESCRIPTIVE SOIL CLASSIFICATION: Soil classification is based on the Unified Classification System. Coarse Grained Soils have more than 50% of their dry weight retained on a #200 sieve; their principal descriptors are: boulders, cobbles, gravel or sand. Fine Grained Soils have less than 50% of their dry weight retained on a #200 sieve; they are principally described as clays if they are plastic, and silts if they are slightly plastic or non-plastic. Major constituents may be added as modifiers and minor constituents may be added according to the relative proportions based on grain size. In addition to gradation, coarse-grained soils are defined on the basis of their in-place relative density and fine-grained soils on the basis of their consistency.

FINE-GRAINED SOILS

(RS) Blows/Ft.	(SS) Blows/Ft.	Consistency
< 3	< 2	Very Soft
3-4	2-3	Soft
5-9	4-6	Medium Stiff
10-18	7-12	Stiff
19-42	13-26	Very Stiff
> 42	> 26	Hard

COARSE-GRAINED SOILS

(RS) Blows/Ft.	(SS) Blows/Ft.	Relative Density
0-6	< 3	Very Loose
7-18	4-9	Loose
19-58	10-29	Medium Dense
59-98	30-49	Dense
> 98	> 49	Very Dense

BEDROCK

(RS) Blows/Ft.	(SS) Blows/Ft.	Consistency
< 30	< 20	Weathered
30-49	20-29	Firm
50-89	30-49	Medium Hard
90-119	50-79	Hard
> 119	> 79	Very Hard

RELATIVE PROPORTIONS OF SAND AND GRAVEL

Descriptive Terms of Other Constituents	Percent of Dry Weight
Trace	< 15
With	15 – 29
Modifier	> 30

GRAIN SIZE TERMINOLOGY

Major Component of Sample	Particle Size
Boulders	Over 12 in. (300mm)
Cobbles	12 in. to 3 in. (300mm to 75 mm)
Gravel	3 in. to #4 sieve (75mm to 4.75 mm)
Sand	#4 to #200 sieve (4.75mm to 0.075mm)
Silt or Clay	Passing #200 Sieve (0.075mm)

RELATIVE PROPORTIONS OF FINES

Descriptive Terms of Other Constituents	Percent of Dry Weight
Trace	< 5
With	5 – 12
Modifiers	> 12

PLASTICITY DESCRIPTION

Term	Plasticity Index
Non-plastic	0
Low	1-10
Medium	11-30
High	30+

Terracon

UNIFIED SOIL CLASSIFICATION SYSTEM

Criteria for Assigning Group Symbols and Group Names Using Laboratory Tests[A]					Soil Classification	
					Group Symbol	Group Name[B]
Coarse Grained Soils More than 50% retained on No. 200 sieve	Gravels More than 50% of coarse fraction retained on No. 4 sieve	Clean Gravels Less than 5% fines[C]	Cu ≥ 4 and 1 ≤ Cc ≤ 3[E]		GW	Well graded gravel[F]
			Cu < 4 and/or 1 > Cc > 3[E]		GP	Poorly graded gravel[F]
		Gravels with Fines More than 12% fines[C]	Fines classify as ML or MH		GM	Silty gravel[F,G,H]
			Fines classify as CL or CH		GC	Clayey gravel[F,G,H]
	Sands 50% or more of coarse fraction passes No. 4 sieve	Clean Sands Less than 5% fines[D]	Cu ≥ 6 and 1 ≤ Cc ≤ 3[E]		SW	Well graded sand[I]
			Cu < 6 and/or 1 > Cc > 3[E]		SP	Poorly graded sand[I]
		Sands with Fines More than 12% fines[D]	Fines classify as ML or MH		SM	Silty sand[G,H,I]
			Fines classify as CL or CH		SC	Clayey sand[G,H,I]
Fine-Grained Soils 50% or more passes the No. 200 sieve	Silts and Clays Liquid limit less than 50	inorganic	PI > 7 and plots on or above "A" line[J]		CL	Lean clay[K,L,M]
			PI < 4 or plots below "A" line[J]		ML	Silt[K,L,M]
		organic	**Liquid limit - oven dried** / **Liquid limit - not dried**	< 0.75	OL	Organic clay[K,L,M,N]
						Organic silt[K,L,M,O]
	Silts and Clays Liquid limit 50 or more	inorganic	PI plots on or above "A" line		CH	Fat clay[K,L,M]
			PI plots below "A" line		MH	Elastic silt[K,L,M]
		organic	Liquid limit - oven dried / Liquid limit - not dried	< 0.75	OH	Organic clay[K,L,M,P]
						Organic silt[K,L,M,Q]
Highly organic soils	Primarily organic matter, dark in color, and organic odor				PT	Peat

[A] Based on the material passing the 3-in. (75-mm) sieve

[B] If field sample contained cobbles or boulders, or both, add "with cobbles or boulders, or both" to group name.

[C] Gravels with 5 to 12% fines require dual symbols: GW-GM well graded gravel with silt, GW-GC well graded gravel with clay, GP-GM poorly graded gravel with silt, GP-GC poorly graded gravel with clay.

[D] Sands with 5 to 12% fines require dual symbols: SW-SM well graded sand with silt, SW-SC well graded sand with clay, SP-SM poorly graded sand with silt, SP-SC poorly graded sand with clay

[E] $Cu = D_{60}/D_{10}$ $\quad Cc = \frac{(D_{30})^2}{D_{10} \times D_{60}}$

[F] If soil contains ≥ 15% sand, add "with sand" to group name.

[G] If fines classify as CL-ML, use dual symbol GC-GM, or SC-SM.

[H] If fines are organic, add "with organic fines" to group name.

[I] If soil contains ≥ 15% gravel, add "with gravel" to group name.

[J] If Atterberg limits plot in shaded area, soil is a CL-ML, silty clay.

[K] If soil contains 15 to 29% plus No. 200, add "with sand" or "with gravel," whichever is predominant.

[L] If soil contains ≥ 30% plus No. 200 predominantly sand, add "sandy" to group name.

[M] If soil contains ≥ 30% plus No. 200, predominantly gravel, add "gravelly" to group name.

[N] PI ≥ 4 and plots on or above "A" line.

[O] PI < 4 or plots below "A" line.

[P] PI plots on or above "A" line.

[Q] PI plots below "A" line.

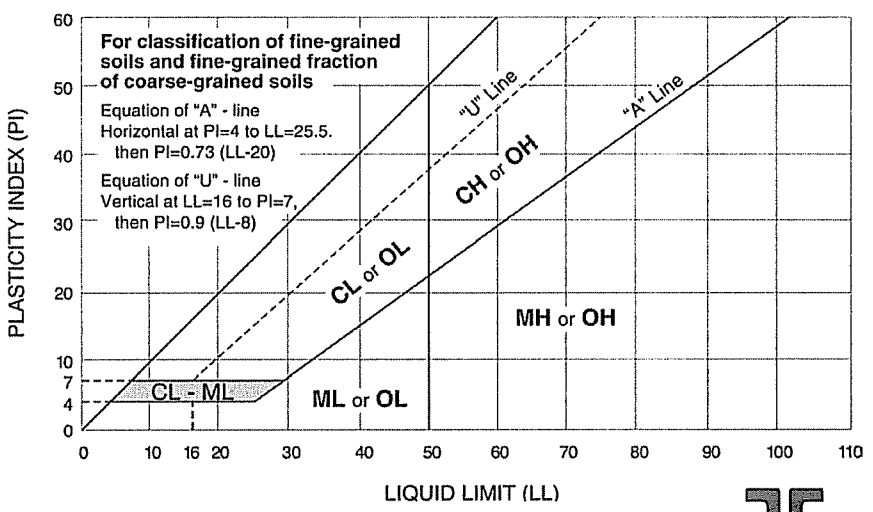

Terracon

ROCK CLASSIFICATION
(Based on ASTM C-294)

Sedimentary Rocks

Sedimentary rocks are stratified materials laid down by water or wind. The sediments may be composed of particles or pre-existing rocks derived by mechanical weathering, evaporation or by chemical or organic origin. The sediments are usually indurated by cementation or compaction.

Chert Very fine-grained siliceous rock composed of micro-crystalline or cryptocrystalline quartz, chalcedony or opal. Chert is various colored, porous to dense, hard and has a conchoidal to splintery fracture.

Claystone Fine-grained rock composed of or derived by erosion of silts and clays or any rock containing clay. Soft massive and may contain carbonate minerals.

Conglomerate Rock consisting of a considerable amount of rounded gravel, sand and cobbles with or without interstitial or cementing material. The cementing or interstitial material may be quartz, opal, calcite, dolomite, clay, iron oxides or other materials.

Dolomite A fine-grained carbonate rock consisting of the mineral dolomite [$CaMg(CO_3)_2$]. May contain non-carbonate impurities such as quartz, chert, clay minerals, organic matter, gypsum and sulfides. Reacts with hydrochloric acid (HCL).

Limestone A fine-grained carbonate rock consisting of the mineral calcite ($CaCO_3$). May contain non-carbonate impurities such as quartz, chert, clay minerals, organic matter, gypsum and sulfides. Reacts with hydrochloric acid (HCL).

Sandstone Rock consisting of particles of sand with or without interstitial and cementing materials. The cementing or interstitial material may be quartz, opal, calcite, dolomite, clay, iron oxides or other material.

Shale Fine-grained rock composed of or derived by erosion of silts and clays or any rock containing clay. Shale is hard, platy, of fissile may be gray, black, reddish or green and may contain some carbonate minerals (calcareous shale).

Siltstone Fine grained rock composed of or derived by erosion of silts or rock containing silt. Siltstones consist predominantly of silt sized particles (0.0625 to 0.002 mm in diameter) and are intermediate rocks between claystones and sandstones and may contain carbonate minerals.

ROCK CLASSIFICATION
(Based on ASTM C-294)

Metamorphic Rocks

Metamorphic rocks form from igneous, sedimentary, or pre-existing metamorphic rocks in response to changes in chemical and physical conditions occurring within the earth's crust after formation of the original rock. The changes may be textural, structural, or mineralogic and may be accompanied by changes in chemical composition. The rocks are dense and may be massive but are more frequently foliated (laminated or layered) and tend to break into platy particles. The mineral composition is very variable depending in part on the degree of metamorphism and in part on the composition of the original rock.

Marble — A recrystallized medium- to coarse-grained carbonate rock composed of calcite or dolomite, or calcite and dolomite. The original impurities are present in the form of new minerals, such as micas, amphiboles, pyroxenes, and graphite.

Metaquartzite — A granular rock consisting essentially of recrystallized quartz. Its strength and resistance to weathering derive from the interlocking of the quartz grains.

Slate — A fine-grained metamorphic rock that is distinctly laminated and tends to split into thin parallel layers. The mineral composition usually cannot be determined with the unaided eye.

Schist — A highly layered rock tending to split into nearly parallel planes (schistose) in which the grain is coarse enough to permit identification of the principal minerals. Schists are subdivided into varieties on the basis of the most prominent mineral present in addition to quartz or to quartz and feldspars; for instance, mica schist. Greenschist is a green schistose rock whose color is due to abundance of one or more of the green minerals, chlorite or amphibole, and is commonly derived from altered volcanic rock.

Gneiss — One of the most common metamorphic rocks, usually formed from igneous or sedimentary rocks by a higher degree of metamorphism than the schists. It is characterized by a layered or foliated structure resulting from approximately parallel lenses and bands of platy minerals, usually micas or prisms, usually amphiboles, and of granular minerals, usually quartz and feldspars. All intermediate varieties between gneiss and schist and between gneiss and granite are often found in the same areas in which well-defined gneisses occur.

ROCK CLASSIFICATION
(Based on ASTM C-294)

Igneous Rocks

Igneous rocks are formed by cooling from a molten rock mass (magma). Igneous rocks are divided into two classes (1) plutonic, or intrusive, that have cooled slowly within the earth; and (2) volcanic, or extrusive, that formed from quickly cooled lavas. Plutonic rocks have grain sizes greater than approximately 1 mm, and are classified as coarse- or medium-grained. Volcanic rocks have grain sizes less than approximately 1 mm, and are classified as fine-grained. Volcanic rocks frequently contain glass. Both plutonic and volcanic rocks may consist of porphyries that are characterized by the presence of large mineral grains in a fine-grained or glassy ground mass. This is the result of sharp changes in rate of cooling or other physico-chemical conditions during solidification of the melt.

Granite

Granite is a medium- to coarse-grained light-colored rock characterized by the presence of potassium feldspar with lesser amounts of plagioclase feldspars and quartz. The characteristic potassium feldspars are orthoclase or microcline, or both; the common plagioclase feldspars are albite and oligoclase. Feldspars are more abundant than quartz. Dark-colored mica (biotite) is usually present, and light-colored mica (muscovite) is frequently present. Other dark-colored ferromagnesian minerals, especially hornblende, may be present in amounts less than those of the light-colored constituents.

Quartz-Monzonite and Grano-Diorite

Rocks similar to granite but contain more plagioclase feldspar than potassium feldspar.

Basalt

Fine-grained extrusive equivalent of gabbro and diabase. When basalt contains natural glass, the glass is generally lower in silica content than that of the lighter-colored extrusive rocks.

LABORATORY TEST
SIGNIFICANCE AND PURPOSE

TEST	SIGNIFICANCE	PURPOSE
California Bearing Ratio	Used to evaluate the potential strength of subgrade soil, subbase, and base course material, including recycled materials for use in road and airfield pavements.	***Pavement Thickness Design***
Consolidation	Used to develop an estimate of both the rate and amount of both differential and total settlement of a structure.	***Foundation Design***
Direct Shear	Used to determine the consolidated drained shear strength of soil or rock.	***Bearing Capacity, Foundation Design, and Slope Stability***
Dry Density	Used to determine the in-place density of natural, inorganic, fine-grained soils.	***Index Property Soil Behavior***
Expansion	Used to measure the expansive potential of fine-grained soil and to provide a basis for swell potential classification.	***Foundation and Slab Design***
Gradation	Used for the quantitative determination of the distribution of particle sizes in soil.	***Soil Classification***
Liquid & Plastic Limit, Plasticity Index	Used as an integral part of engineering classification systems to characterize the fine-grained fraction of soils, and to specify the fine-grained fraction of construction materials.	***Soil Classification***
Permeability	Used to determine the capacity of soil or rock to conduct a liquid or gas.	***Groundwater Flow Analysis***
pH	Used to determine the degree of acidity or alkalinity of a soil.	***Corrosion Potential***
Resistivity	Used to indicate the relative ability of a soil medium to carry electrical currents.	***Corrosion Potential***
R-Value	Used to evaluate the potential strength of subgrade soil, subbase, and base course material, including recycled materials for use in road and airfield pavements.	***Pavement Thickness Design***
Soluble Sulfate	Used to determine the quantitative amount of soluble sulfates within a soil mass.	***Corrosion Potential***
Unconfined Compression	To obtain the approximate compressive strength of soils that possess sufficient cohesion to permit testing in the unconfined state.	***Bearing Capacity Analysis for Foundations***
Water Content	Used to determine the quantitative amount of water in a soil mass.	***Index Property Soil Behavior***

Terracon

REPORT TERMINOLOGY
(Based on ASTM D653)

Allowable Soil Bearing Capacity	The recommended maximum contact stress developed at the interface of the foundation element and the supporting material.
Alluvium	Soil, the constituents of which have been transported in suspension by flowing water and subsequently deposited by sedimentation.
Aggregate Base Course	A layer of specified material placed on a subgrade or subbase usually beneath slabs or pavements.
Backfill	A specified material placed and compacted in a confined area.
Bedrock	A natural aggregate of mineral grains connected by strong and permanent cohesive forces. Usually requires drilling, wedging, blasting or other methods of extraordinary force for excavation.
Bench	A horizontal surface in a sloped deposit.
Caisson (Drilled Pier or Shaft)	A concrete foundation element cast in a circular excavation which may have an enlarged base. Sometimes referred to as a cast-in-place pier or drilled shaft.
Coefficient of Friction	A constant proportionality factor relating normal stress and the corresponding shear stress at which sliding starts between the two surfaces.
Colluvium	Soil, the constituents of which have been deposited chiefly by gravity such as at the foot of a slope or cliff.
Compaction	The densification of a soil by means of mechanical manipulation
Concrete Slab-on-Grade	A concrete surface layer cast directly upon a base, subbase or subgrade, and typically used as a floor system.
Differential Movement	Unequal settlement or heave between, or within foundation elements of structure.
Earth Pressure	The pressure exerted by soil on any boundary such as a foundation wall.
ESAL	Equivalent Single Axle Load, a criteria used to convert traffic to a uniform standard, (18,000 pound axle loads).
Engineered Fill	Specified material placed and compacted to specified density and/or moisture conditions under observations of a representative of a geotechnical engineer.
Equivalent Fluid	A hypothetical fluid having a unit weight such that it will produce a pressure against a lateral support presumed to be equivalent to that produced by the actual soil. This simplified approach is valid only when deformation conditions are such that the pressure increases linearly with depth and the wall friction is neglected.
Existing Fill (or Man-Made Fill)	Materials deposited throughout the action of man prior to exploration of the site.
Existing Grade	The ground surface at the time of field exploration.

REPORT TERMINOLOGY
(Based on ASTM D653)

Expansive Potential	The potential of a soil to expand (increase in volume) due to absorption of moisture.
Finished Grade	The final grade created as a part of the project.
Footing	A portion of the foundation of a structure that transmits loads directly to the soil.
Foundation	The lower part of a structure that transmits the loads to the soil or bedrock.
Frost Depth	The depth at which the ground becomes frozen during the winter season.
Grade Beam	A foundation element or wall, typically constructed of reinforced concrete, used to span between other foundation elements such as drilled piers.
Groundwater	Subsurface water found in the zone of saturation of soils or within fractures in bedrock.
Heave	Upward movement.
Lithologic	The characteristics which describe the composition and texture of soil and rock by observation.
Native Grade	The naturally occurring ground surface.
Native Soil	Naturally occurring on-site soil, sometimes referred to as natural soil.
Optimum Moisture Content	The water content at which a soil can be compacted to a maximum dry unit weight by a given compactive effort.
Perched Water	Groundwater, usually of limited area maintained above a normal water elevation by the presence of an intervening relatively impervious continuous stratum.
Scarify	To mechanically loosen soil or break down existing soil structure.
Settlement	Downward movement.
Skin Friction (Side Shear)	The frictional resistance developed between soil and an element of the structure such as a drilled pier.
Soil (Earth)	Sediments or other unconsolidated accumulations of solid particles produced by the physical and chemical disintegration of rocks, and which may or may not contain organic matter.
Strain	The change in length per unit of length in a given direction.
Stress	The force per unit area acting within a soil mass.
Strip	To remove from present location.
Subbase	A layer of specified material in a pavement system between the subgrade and base course.
Subgrade	The soil prepared and compacted to support a structure, slab or pavement system.

Appendix N

Cost Information

OPINION OF PROBABLE CONSTRUCTION COST

Client: **City of Sterling**	
Project: **City of Sterling Water Treatment Plant**	
Item: **Preliminary Design - Site Civil**	

Project No. STERLNG02	
By: DRW	Chk By: RJD
Date: 5-21-09	Date: 5-29-09

*All costs are year 2009

DESCRIPTION	QTY.	UNITS	INSTALLED COST	TOTAL COST
Site Civil				
Demo Existing Concrete Pad	1	LS	$1,500.00	$1,500
Cut/Fill	10,000	CY	$4	$40,000
Grading	13,000	SY	$1	$13,000
Asphalt Paving	2,800	SY	$25	$70,000
Fence	1,400	LF	$30	$42,000
Misc. Concrete (sidewalk, curb gutter)	40	CY	$300	$12,000
Storm Water System Pond and Piping	1	LS	$25,000	$25,000
Landscape (includes irrigation system)	1	LS	$10,000	$10,000
Seeding	13,000	SY	$1	$13,000
Overflow Piping / Swale to Henderson Smith Ditch	200	LF	$130	$26,000
Sewer Line Relocate (includes 2 manholes)	600	LF	$100	$60,000
Sanitary Sewer Piping	100	LF	$50	$5,000
Connection Manholes	2	EA	$5,500	$11,000
Vaults w/ Valve	5	EA	$6,000	$30,000
Fire Hydrant	2	EA	$3,000	$6,000
Site Electrical	1	EA	$35,000	$35,000
SUBTOTAL				$399,500
SITE CIVIL TOTAL (ROUNDED)				**$400,000**

OPINION OF PROBABLE CONSTRUCTION COST

Client: **City of Sterling**	
Project: **City of Sterling Water Treatment Plant**	
Item: **Preliminary Design - Process Building**	

Project No. STERLNG02	
By: DRW	Chk By: RJD
Date: 5-21-09	Date: 5-29-09

*All costs are year 2009

DESCRIPTION	QTY.	UNITS	INSTALLED COST	TOTAL COST
Architectural				
Superstructure	20,500	SF	$90	$1,845,000
ARCHITECTURAL SUBTOTAL (ROUNDED)				**$1,845,000**
Structural				
Excavation	9,300	CY	$7	$65,100
Structural Backfill (on site material)	4,500	CY	$10	$45,000
CIP Concrete	2,400	CY	$600	$1,440,000
Caissons	25	EA	$2,500	$62,500
Structural Steel	61,500	LBS	$4	$246,000
STRUCTURAL SUBTOTAL (ROUNDED)				**$1,858,600**
Process				
Bridge Crane (NF Unit)	1	EA	$60,000	$60,000
Cartridge Filters	3	EA	$59,000	$177,000
NF Process				
NF Skid/Valves/Piping/Instrumentation	4	EA	$100,000	$400,000
Pressure Vessels (54 ea. Skid)	216	EA	$3,200	$691,200
NF Elements (7 ea. Pressure Vessel)	1,512	EA	$530	$801,360
NF Feed Pumps (First Pass)	3	EA	$130,000	$390,000
NF Feed Pumps (Second Pass)	1	EA	$100,000	$100,000
NF Membrane Cleaning System (2 Systems)				
Dilution Tank (1 ea.)	2	EA	$25,000	$50,000
Citric Acid Tank	1	EA	$25,000	$25,000
Membrane Cleaning Pumps (1 ea.)	2	EA	$20,000	$40,000
Cartridge Filter (1 ea.)	2	EA	$50,000	$100,000
Misc. Platforms/Equipment (1 ea.)	1	EA	$10,000	$10,000
MF Process				
MF Skid/Valves/Piping/Instrumentation (2 ea.)	1	EA	$1,595,000	$1,595,000
MF Feed Pumps	2	EA	$30,000	$60,000
Neutralization Vault Equipment and Piping	1	EA	$20,000	$20,000
Finished Water and Concentrate Pumps				
Concentrate Discharge Pumps	3	EA	$20,000	$60,000
Finished Water Pumps (3 large)	3	EA	$49,200	$147,600
Finished Water Pumps (1 small)	1	EA	$45,600	$45,600
Miscellaneous				
Process Piping, Valves and Mixers	1	LS	$900,000	$900,000
PROCESS SUBTOTAL (ROUNDED)				**$5,672,800**

OPINION OF PROBABLE CONSTRUCTION COST

Client: **City of Sterling**	
Project: **City of Sterling Water Treatment Plant**	
Item: **Preliminary Design - Process Building**	

Project No. STERLNG02	
By: DRW	Chk By: RJD
Date: 5-21-09	Date: 5-29-09

*All costs are year 2009

DESCRIPTION	QTY.	UNITS	INSTALLED COST	TOTAL COST
Mechanical				
Equipment	1	LS	$307,500	$307,500
MECHANICAL SUBTOTAL (ROUNDED)				**$307,500**
Electrical & Instrumentation				
Equipment	1	LS	$1,742,500	$1,742,500
ELECTRICAL SUBTOTAL (ROUNDED)				**$1,742,500**
PROCESS BUILDING TOTAL (ROUNDED)				**$11,430,000**

OPINION OF PROBABLE CONSTRUCTION COST

Client: **City of Sterling**	
Project: **City of Sterling Water Treatment Plant**	
Item: **Preliminary Design - Chemical Building**	

Project No. STERLNG02	
By: DRW	Chk By: RJD
Date: 5-21-09	Date: 5-29-09

*All costs are year 2009

DESCRIPTION	QTY.	UNITS	INSTALLED COST	TOTAL COST
Architectural				
Superstructure	3,800	SF	$100	$380,000
ARCHITECTURAL SUBTOTAL (ROUNDED)				**$380,000**
Structural				
Excavation	500	CY	$7	$3,500
Structural Backfill (on site material)	250	CY	$10	$2,500
CIP Concrete	150	CY	$600	$90,000
Structural Steel	15,200	LBS	$4	$60,800
STRUCTURAL SUBTOTAL (ROUNDED)				**$156,800**
Process				
Sodium Hydroxide Chemical Feed				
Bulk Tank	2	EA	$11,000	$22,000
Chemical Feed Pumps	2	EA	$15,000	$30,000
Feed Panels	1	EA	$3,400	$3,400
Sodium Hypochlorite Chemical Feed				
Bulk Tank	2	EA	$6,000	$12,000
Chemical Feed Pumps	2	EA	$15,000	$30,000
Feed Panels	1	EA	$3,400	$3,400
Pretreatment Chemical (First Pass)				
Bulk Tank	1	EA	$20,000	$20,000
Chemical Feed Pumps	2	EA	$15,000	$30,000
Feed Panels	1	EA	$3,400	$3,400
Pretreatment Chemical (Second Pass)				
Bulk Tank	1	EA	$5,000	$5,000
Chemical Feed Pumps	2	EA	$15,000	$30,000
Feed Panels	1	EA	$3,400	$3,400
Miscellaneous				
Process Piping, Valves and Mixers	1	LS	$100,000	$100,000
Eyewash Stations / Showers	3	EA	$1,000	$3,000
PROCESS SUBTOTAL (ROUNDED)				**$295,600**
Mechanical				
Equipment	1	LS	$57,000	$57,000
Fire Sprinkler System	1	LS	$38,000	$38,000
MECHANICAL SUBTOTAL (ROUNDED)				**$95,000**
Electrical & Instrumentation				
Equipment	1	LS	$114,000	$114,000
ELECTRICAL SUBTOTAL (ROUNDED)				**$114,000**
CHEMICAL BUILDING TOTAL (ROUNDED)				**$1,050,000**

OPINION OF PROBABLE CONSTRUCTION COST

Client: **City of Sterling**	
Project: **City of Sterling Water Treatment Plant**	
Item: **Preliminary Design - Pipelines and Deep Wells**	

Project No. STERLNG02	
By: DRW	Chk By: RJD
Date: 5-21-09	Date: 5-29-09

*All costs are year 2009

DESCRIPTION	QTY.	UNITS	INSTALLED COST	TOTAL COST
Pipelines				
Raw Water Pipelines (16-inch)	5,800	LF	$120	$696,000
Finished Water Pipelines (16-inch)	3,400	LF	$120	$408,000
Finished Water Pipelines (12-inch)	3,300	LF	$90	$297,000
Concentrate Pipeline (6-inch)	5,500	LF	$50	$275,000
PIPELINE SUBTOTAL				**$1,680,000**
Deep Wells				
Deep Wells	2	EA	$1,200,000	$2,400,000
SUBTOTAL				**$4,080,000**
PIPELINES AND DEEP WELL TOTAL (ROUNDED)				**$4,080,000**

Year	Average Daily Production (mgd)	Annual Water Production (gallons)	WTP O&M Cost ($/1,000 gallons)	Annual WTP O&M Cost ($)	Annual Distribution System O&M Cost ($)	Annual Reserve Fund Cost ($)	Reserve Fund Balance ($)	Annual Capital Outlay ($)	Annual Other Expenses ($)	Annual Debt Service ($)	Annual Total Expense ($)	Total Cost per 1,000 Gallons ($)	Population	# of Domestic Taps	# of New Domestic Taps	Cost per New Domestic Tap ($)	Annual Domestic Tap Income ($)	# of Non-Domestic Taps	# of New Non-Domestic Taps	Cost per New Non-Domestic Tap ($)	Annual Non-Domestic Tap Income ($)	Domestic Base Rate ($)	Non-Domestic Base Rate	Annual Base Rate Income	Break Even Water Rate ($ per 1,000 gallons)	Total Water Rate ($ per 1,000 gallons)
2008	3.63	1,325,161,000			$ 1,351,586		$ -	$ 304,700			$ 1,656,286	$ 1.25	14,258	4,753		$ 2,170	$ -	532		$ 16,220	$ -	$ 8.25	$ 19.46	$ 49,562	$ 1.22	$ 1.44
2009	3.61	1,318,887,312			$ 1,405,649		$ -	$ 316,888			$ 1,722,537	$ 1.31	14,544	4,848	95	$ 2,257	$ 215,148	543	11	$ 16,869	$ 180,016	$ 8.25	$ 19.46	$ 50,556	$ 0.97	$ 1.44
2010	3.61	1,319,201,282			$ 1,461,875	$ 365,469	$ 365,469	$ 329,564			$ 2,156,908	$ 1.64	14,900	4,967	119	$ 2,347	$ 278,676	556	13	$ 17,544	$ 233,170	$ 8.58	$ 20.24	$ 53,866	$ 1.21	$ 1.33
2011	3.61	1,319,070,096			$ 1,520,350	$ 14,619	$ 380,088	$ 342,746		$ 1,844,062	$ 3,721,777	$ 2.82	15,253	5,084	118	$ 2,441	$ 287,178	569	13	$ 18,245	$ 240,284	$ 8.92	$ 21.05	$ 57,347	$ 2.39	$ 2.63
2012	3.66	1,337,164,225	$ 1.18	$ 1,577,854	$ 1,581,164	$ 409,667	$ 789,755	$ 356,456		$ 1,844,062	$ 5,769,203	$ 4.31	15,610	5,203	119	$ 2,539	$ 301,966	582	13	$ 18,975	$ 252,657	$ 9.28	$ 21.89	$ 61,037	$ 3.87	$ 4.26
2013	3.71	1,355,388,561	$ 1.23	$ 1,663,333	$ 1,644,411	$ 37,181	$ 826,936	$ 370,714		$ 1,844,062	$ 5,559,701	$ 4.10	15,972	5,324	121	$ 2,640	$ 318,621	596	14	$ 19,734	$ 266,592	$ 9.65	$ 22.77	$ 64,950	$ 3.64	$ 4.00
2014	3.75	1,370,266,272	$ 1.28	$ 1,748,854	$ 1,710,187	$ 37,824	$ 864,760	$ 385,543		$ 1,844,062	$ 5,726,471	$ 4.18	16,329	5,443	119	$ 2,746	$ 326,606	609	13	$ 20,523	$ 273,273	$ 10.04	$ 23.68	$ 69,057	$ 3.71	$ 4.08
2015	3.81	1,389,622,824	$ 1.33	$ 1,844,501	$ 1,778,595	$ 41,014	$ 905,774	$ 400,964		$ 1,844,062	$ 5,909,136	$ 4.25	16,684	5,561	119	$ 2,856	$ 338,433	623	13	$ 21,344	$ 283,169	$ 10.44	$ 24.62	$ 73,384	$ 3.77	$ 4.15
2016	3.86	1,409,400,482	$ 1.38	$ 1,945,583	$ 1,849,739	$ 43,056	$ 948,830	$ 417,003		$ 1,844,062	$ 6,099,443	$ 4.33	17,048	5,683	121	$ 2,970	$ 359,692	636	14	$ 22,198	$ 300,956	$ 10.86	$ 25.61	$ 77,981	$ 3.82	$ 4.20
2017	3.91	1,428,769,586	$ 1.44	$ 2,051,214	$ 1,923,728	$ 44,905	$ 993,735	$ 433,683		$ 1,844,062	$ 6,297,592	$ 4.41	17,407	5,802	120	$ 3,089	$ 370,064	650	13	$ 23,086	$ 309,635	$ 11.29	$ 26.63	$ 82,810	$ 3.89	$ 4.28
2018	3.97	1,447,961,289	$ 1.49	$ 2,161,917	$ 2,000,677	$ 46,913	$ 1,040,649	$ 451,030		$ 1,844,062	$ 6,504,600	$ 4.49	17,766	5,922	120	$ 3,212	$ 384,171	663	13	$ 24,010	$ 321,438	$ 11.74	$ 27.70	$ 87,898	$ 3.96	$ 4.36
2019	4.02	1,467,158,616	$ 1.55	$ 2,278,203	$ 2,080,705	$ 49,078	$ 1,089,727	$ 469,072		$ 1,844,062	$ 6,721,120	$ 4.58	18,127	6,042	120	$ 3,341	$ 401,709	676	13	$ 24,970	$ 336,112	$ 12.21	$ 28.81	$ 93,270	$ 4.03	$ 4.44
2020	4.08	1,488,355,817	$ 1.61	$ 2,403,563	$ 2,163,933	$ 52,147	$ 1,141,874	$ 487,835		$ 1,844,062	$ 6,951,539	$ 4.67	18,490	6,163	121	$ 3,474	$ 420,788	690	14	$ 25,969	$ 352,076	$ 12.70	$ 29.96	$ 98,945	$ 4.10	$ 4.51
2021	4.13	1,508,464,975	$ 1.68	$ 2,533,479	$ 2,250,490	$ 54,118	$ 1,195,992	$ 507,348		$ 1,844,062	$ 7,189,497	$ 4.77	18,840	6,280	117	$ 3,613	$ 421,180	703	13	$ 27,007	$ 352,404	$ 13.21	$ 31.16	$ 104,849	$ 4.20	$ 4.62
2022	4.19	1,529,942,929	$ 1.75	$ 2,672,333	$ 2,340,510	$ 54,008	$ 1,250,000	$ 527,642		$ 1,844,062	$ 7,438,555	$ 4.86	19,192	6,397	117	$ 3,758	$ 441,284	716	13	$ 28,088	$ 369,225	$ 13.74	$ 32.40	$ 111,082	$ 4.28	$ 4.71
2023	4.25	1,551,325,855	$ 1.82	$ 2,818,070	$ 2,434,130	$ -	$ 1,250,000	$ 548,747		$ 1,844,062	$ 7,645,010	$ 4.93	19,544	6,515	117	$ 3,908	$ 458,935	729	13	$ 29,211	$ 383,994	$ 14.29	$ 33.70	$ 117,646	$ 4.33	$ 4.76
2024	4.32	1,575,538,641	$ 1.89	$ 2,976,536	$ 2,531,495	$ -	$ 1,250,000	$ 570,697		$ 1,844,062	$ 7,922,791	$ 5.03	19,893	6,631	116	$ 4,064	$ 472,009	742	13	$ 30,380	$ 394,933	$ 14.86	$ 35.05	$ 124,533	$ 4.42	$ 4.86
2025	4.38	1,599,119,003	$ 1.96	$ 3,141,928	$ 2,632,755	$ -	$ 1,250,000	$ 593,525		$ 1,844,062	$ 8,212,270	$ 5.14	20,232	6,744	113	$ 4,227	$ 478,067	755	13	$ 31,595	$ 400,002	$ 15.45	$ 36.45	$ 131,724	$ 4.53	$ 4.98
2026	4.44	1,620,576,229	$ 2.04	$ 3,311,450	$ 2,738,065	$ -	$ 1,250,000	$ 617,266		$ 1,844,062	$ 8,510,844	$ 5.25	20,541	6,847	103	$ 4,396	$ 452,424	766	12	$ 32,859	$ 378,546	$ 16.07	$ 37.91	$ 139,083	$ 4.68	$ 5.14
2027	4.49	1,640,497,569	$ 2.13	$ 3,486,243	$ 2,847,588	$ -	$ 1,250,000	$ 641,957		$ 1,844,062	$ 8,819,850	$ 5.38	20,827	6,942	96	$ 4,572	$ 436,841	777	11	$ 34,173	$ 365,508	$ 16.71	$ 39.42	$ 146,665	$ 4.82	$ 5.30
2028	4.55	1,658,973,370	$ 2.21	$ 3,666,527	$ 2,961,491	$ -	$ 1,250,000	$ 667,635		$ 1,844,062	$ 9,139,715	$ 5.51	21,093	7,031	89	$ 4,755	$ 421,349	787	10	$ 35,540	$ 352,545	$ 17.38	$ 41.00	$ 154,479	$ 4.97	$ 5.47
2029	4.60	1,678,030,232	$ 2.30	$ 3,856,990	$ 3,079,951	$ -	$ 1,250,000	$ 694,341		$ 1,844,062	$ 9,475,344	$ 5.65	21,367	7,122	91	$ 4,945	$ 451,984	797	10	$ 36,962	$ 378,178	$ 18.08	$ 42.64	$ 162,746	$ 5.08	$ 5.59
2030	4.65	1,697,334,834	$ 2.39	$ 4,057,417	$ 3,203,149	$ -	$ 1,250,000	$ 722,114		$ 1,844,062	$ 9,826,742	$ 5.79	21,645	7,215	93	$ 5,143	$ 476,175	808	10	$ 38,440	$ 398,418	$ 18.80	$ 44.34	$ 171,457	$ 5.20	$ 5.72
2031	4.70	1,716,890,395	$ 2.49	$ 4,268,330	$ 3,331,275	$ -	$ 1,250,000	$ 750,999		$ 1,844,062	$ 10,194,666	$ 5.94	21,927	7,309	94	$ 5,348	$ 501,659	818	10	$ 39,978	$ 419,742	$ 19.55	$ 46.12	$ 180,633	$ 5.32	$ 5.85
2032	4.76	1,736,700,179	$ 2.59	$ 4,490,282	$ 3,464,526	$ -	$ 1,250,000	$ 781,039		$ 1,844,062	$ 10,579,909	$ 6.09	22,212	7,404	95	$ 5,562	$ 528,508	829	11	$ 41,577	$ 442,206	$ 20.33	$ 47.96	$ 190,300	$ 5.45	$ 5.99

Notes:

1. Debt Service assumes a 20-year loan for $29,000,000 at 2.5% APY.
2. Distribution system O&M is based on 2009 annual budget.
3. Reserve fund assumes a 3-month reserve for WTP and Distribution System O&M costs. This fund is capped at $1.25 million.
4. Capital outlay is based on 2009 annual budget.
5. Cost of domestic taps is based on a 3/4-inch tap and includes Tapping Fee, Service Fee and Plant Investment Fee at current rates, escalated at 4% per year.
6. Cost of non-domestic taps is based on a 3-inch tap and includes Tapping Fee, Service Fee and Plant Investment Fee at current rates, escalated 4% per year. Tapping and Service Fees were assumed to be 3 times the cost of a 1-inch connection.
7. Base rate is based on 3/4-inch tap for domestic and 3-inch tap for non-domestic connections, escalated at 4% per year.
9. Total water rate is 1.1X the break even water rate in accordance with the SRF loan Rate Covenant.
10. O&M costs, tap fees and base rates are escalated at 4% per year.
11. Average daily flow, population and number of non-domestic taps are based on Scenario 3 from TM No. 5.
12. Number of domestic taps assumes 3 people per domestic tap.

Appendix O

Public Comments and Responses